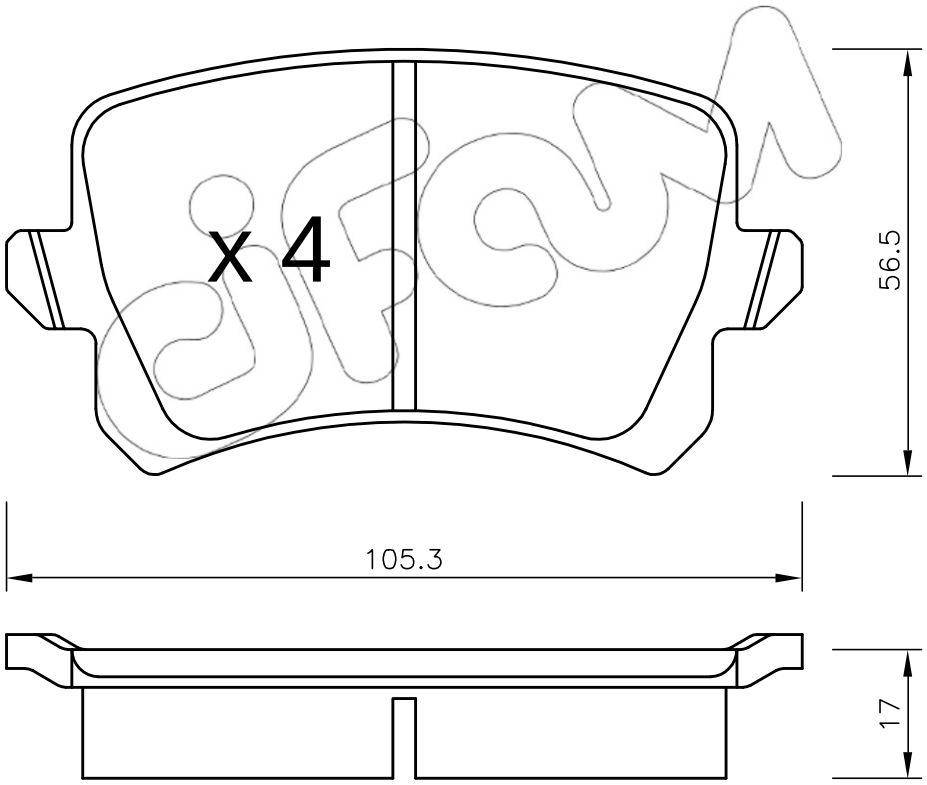
x 4
56.5
105.3
17