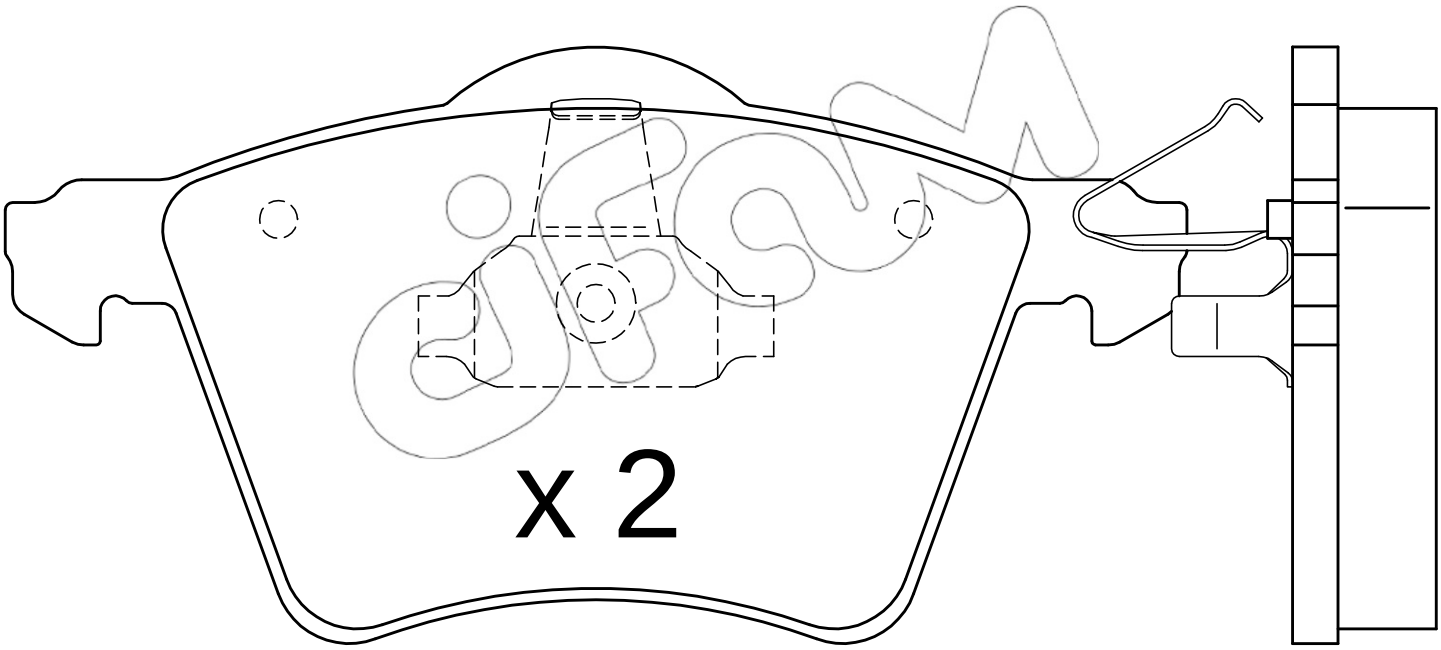
x 2

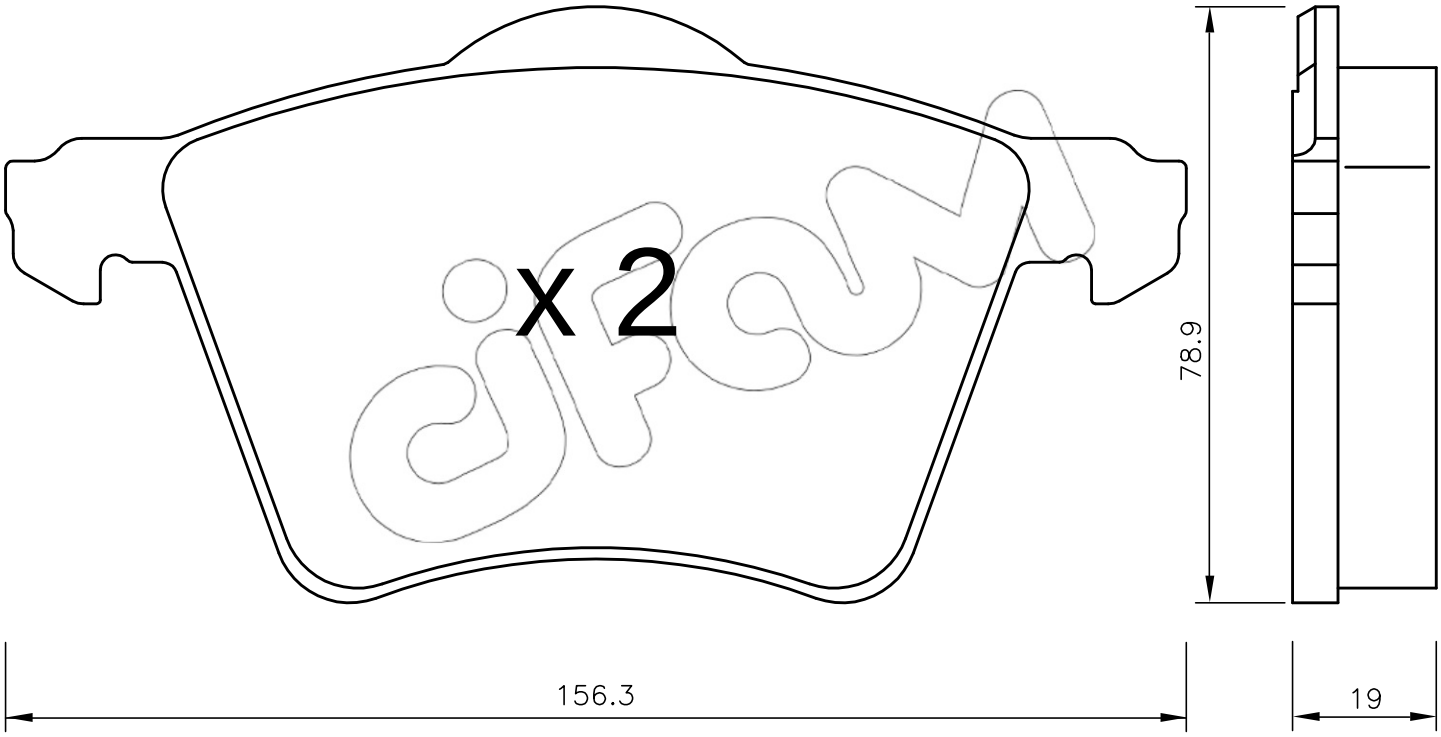
x 2
78.9
156.3
19