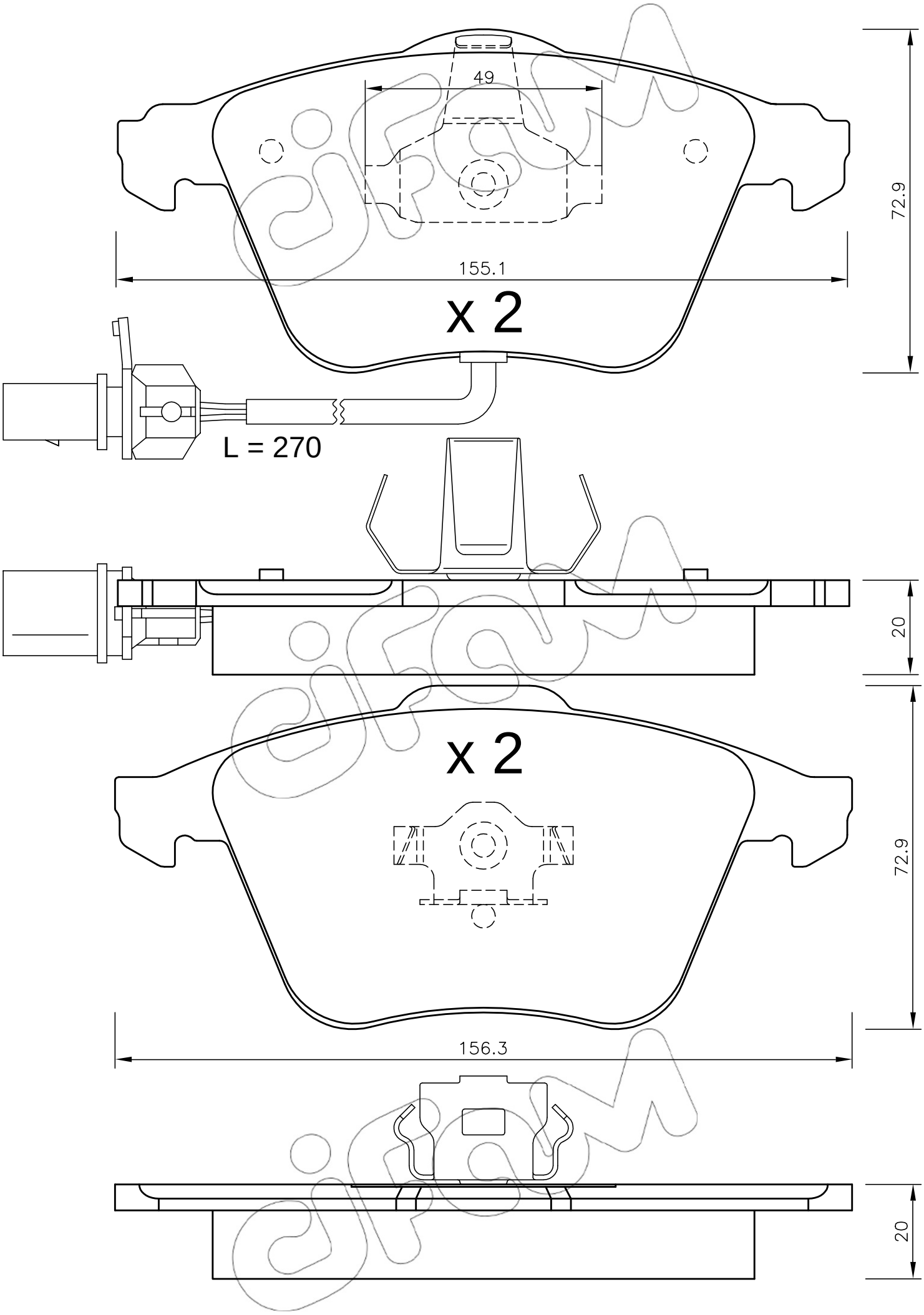
49
72.9
155.1
x 2
L = 270
20
x 2
72.9
156.3
20