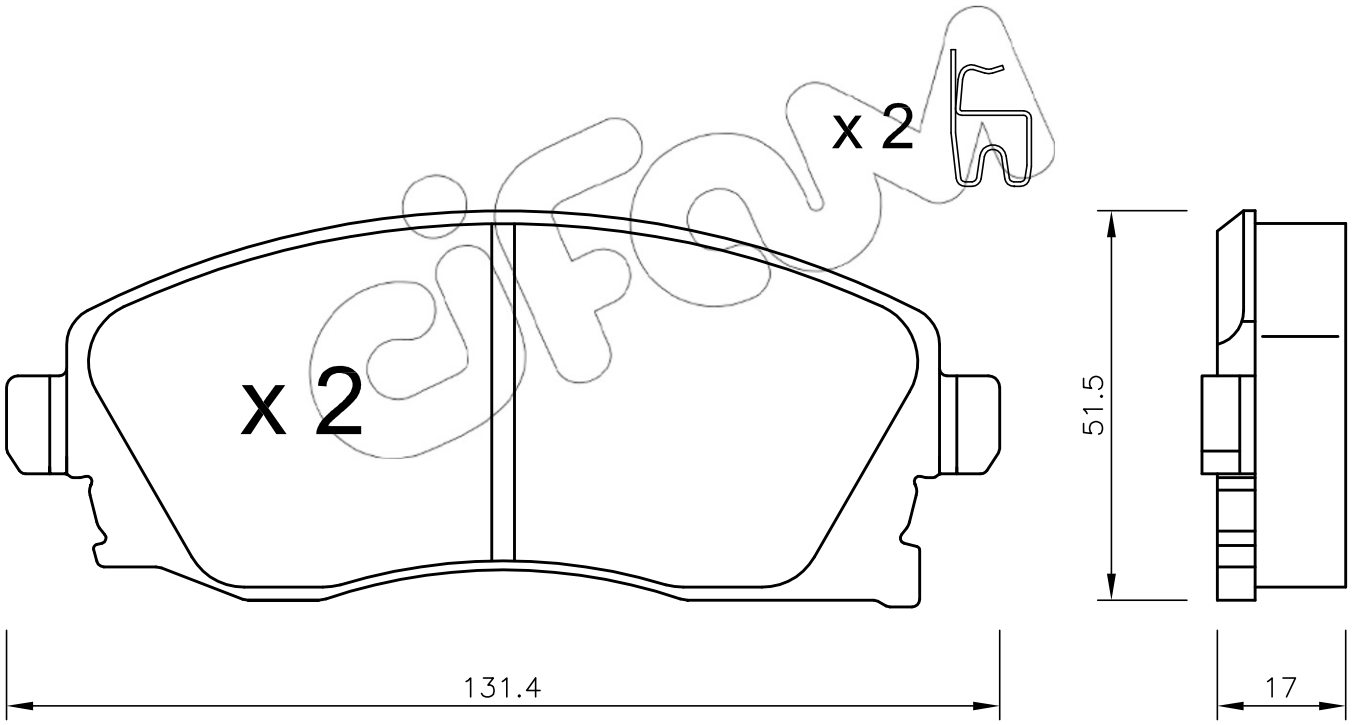
x 2
x 2
51.5
131.4
17

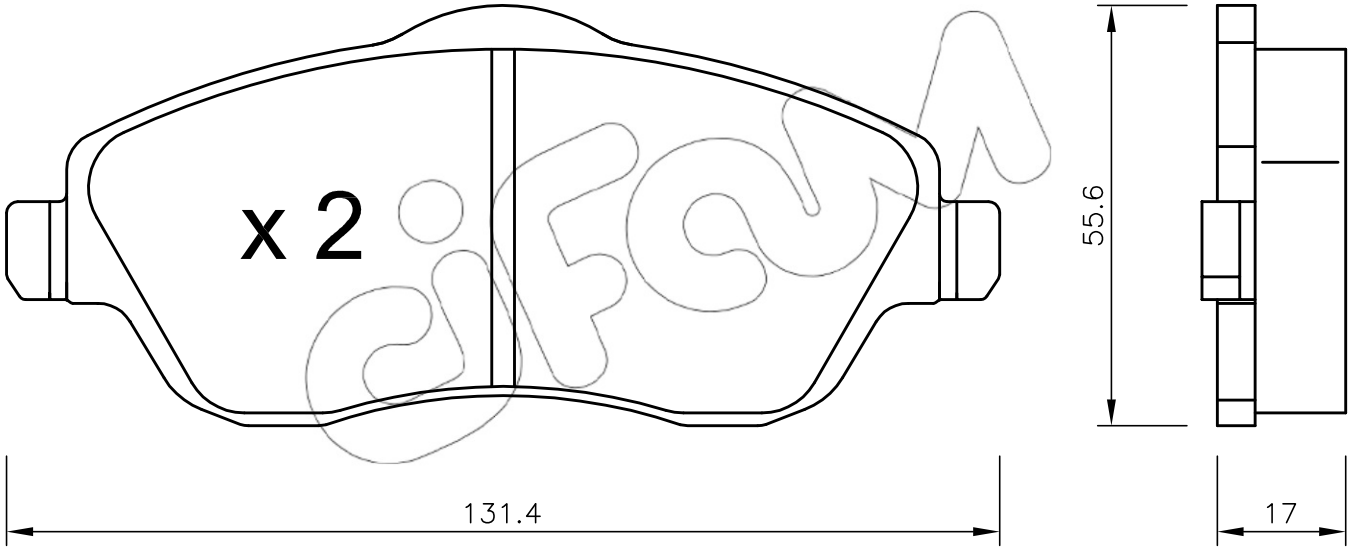
x 2
55.6
131.4
17