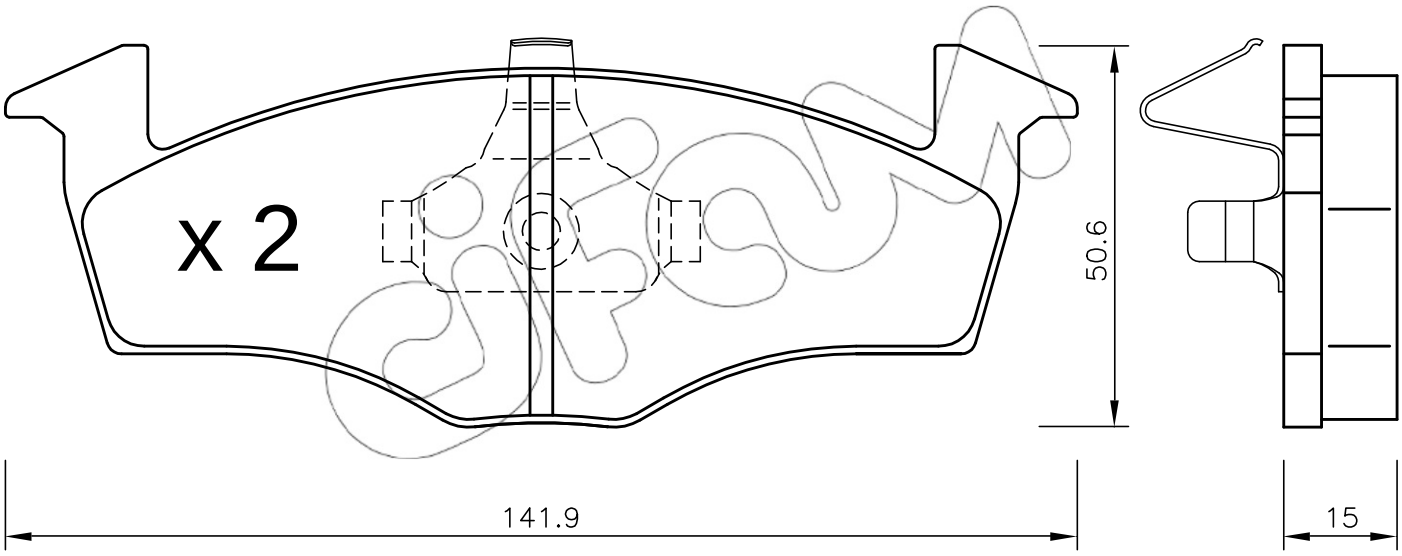
x 2
50.6
141.9
15

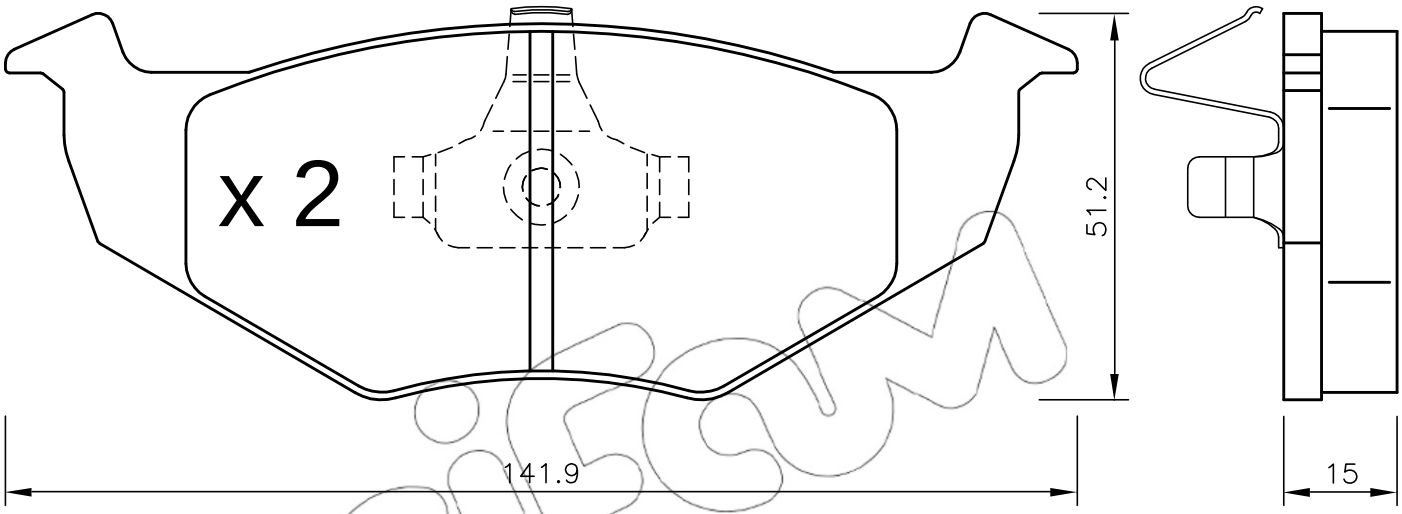
x 2
51.2
141.9
15