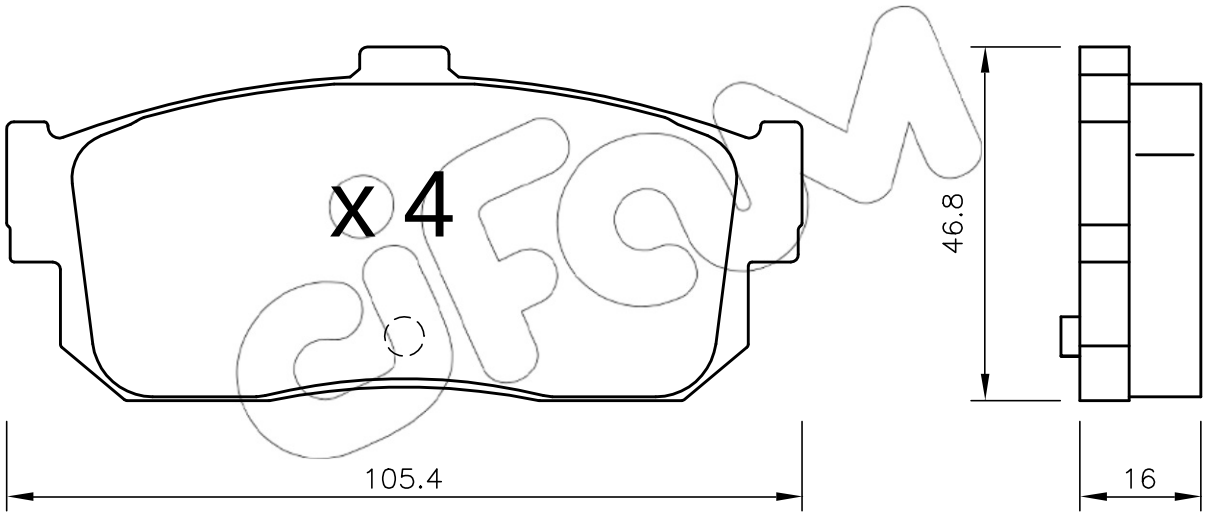
x 4
46.8
105.4
16