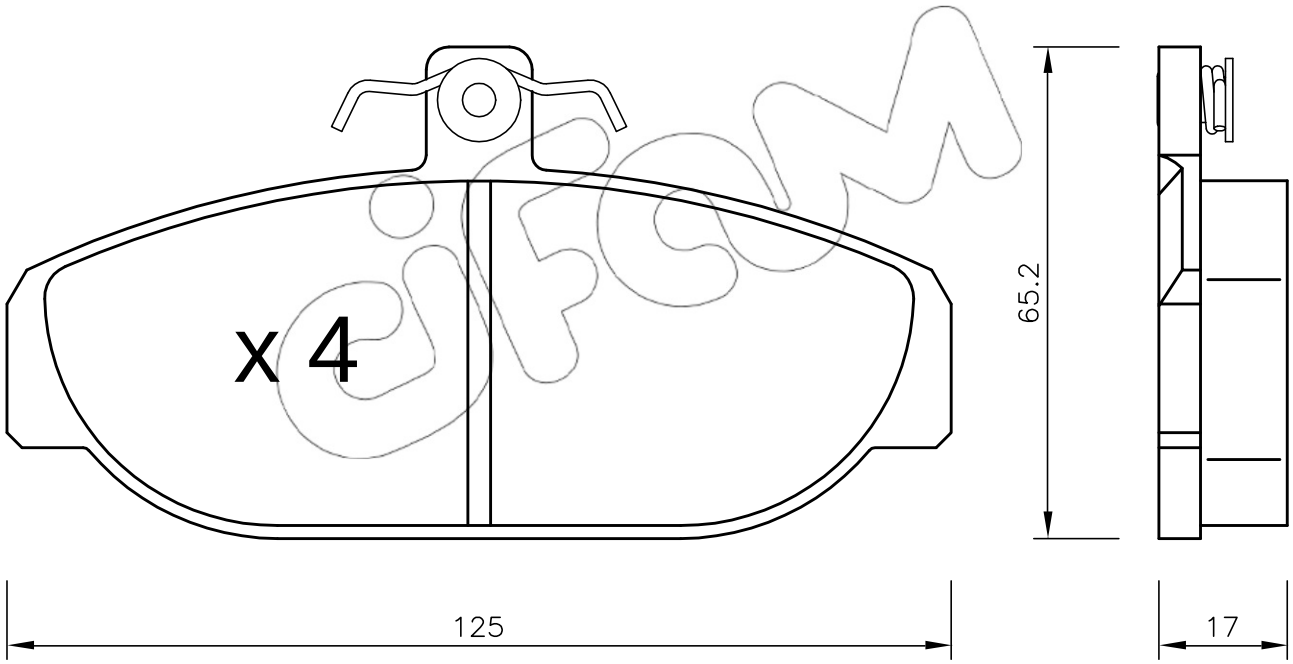
x 4
65.2
125
17