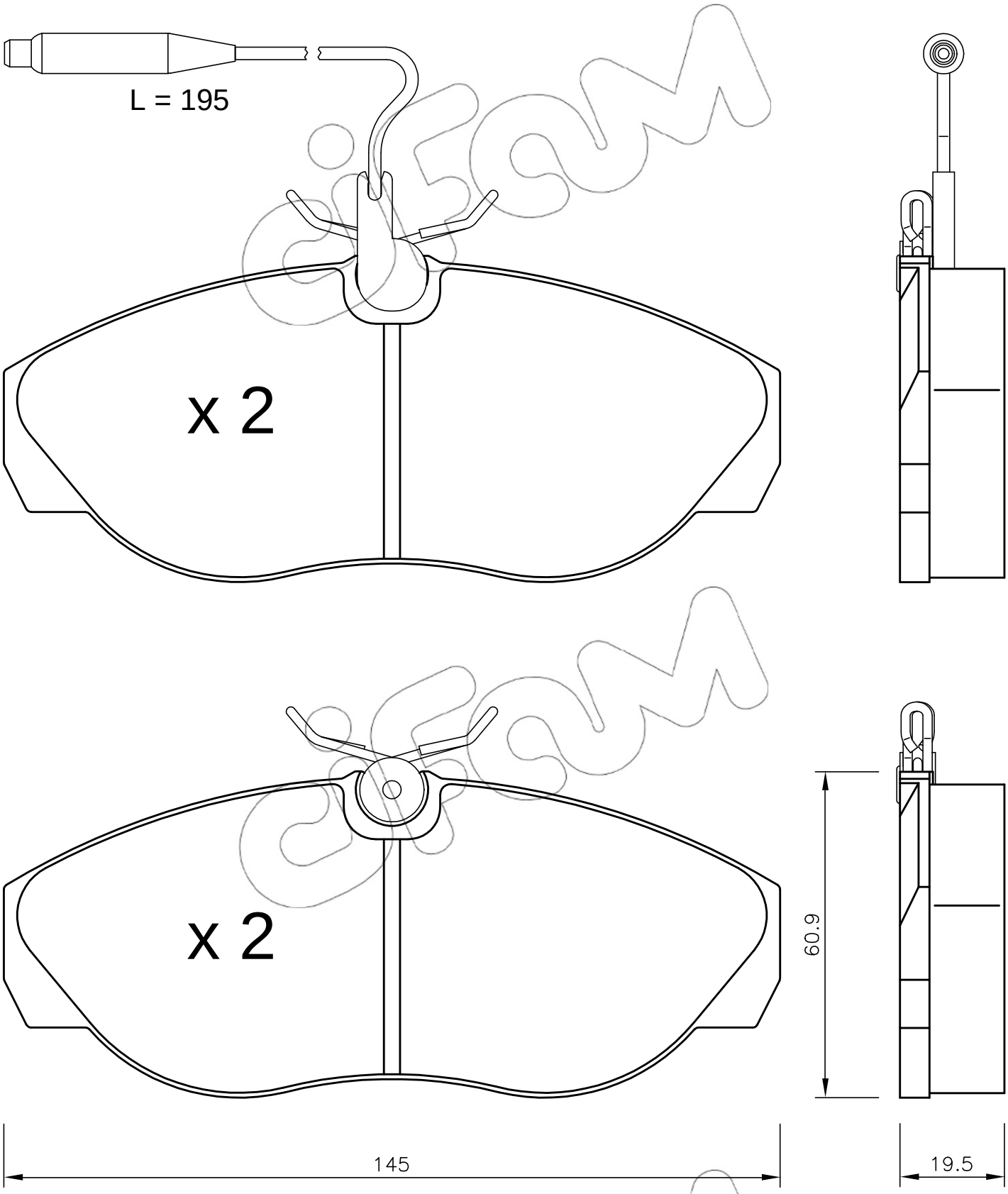
L = 195
x 2
x 2
60.9
145
19.5