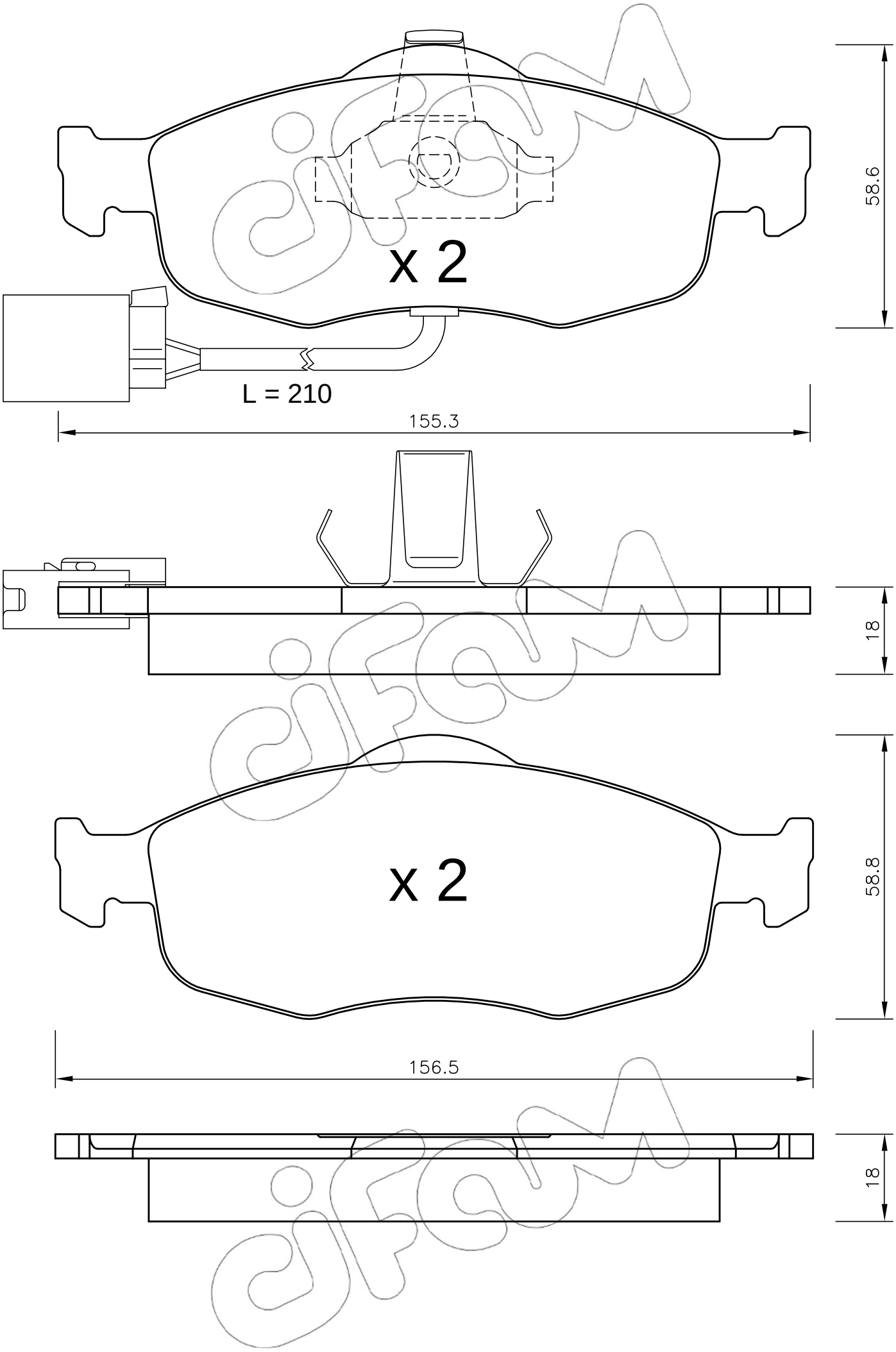
x 2
58.6
L = 210
155.3
18
x 2
58.8
156.5
18