OE#TAKEN AS REFERENCE: BCYA-26-43Z

BILL OF MATERIALS & COMPONENTS

Nr	FT CODE	DESCRIPTION	Q.TY
1	FT#C	Friction compound for passenger cars	–
– Friction material: 11 – Identification letter: C – Friction coefficient: according to ISLB-28 – Shear resistance: according to ISLB-17 – Compressibility: according to ISLB-30 – Density: according to ISLB-19 – Hardness: according to ISLB-18 – Friction material surface: 2.543,6 mm² – General tolerances: ±0.5			
2	FT#U	Underlayer compound	–
– Identification letter: U – Color: black or red – Friction coefficient: according to ISLB-28 – Shear resistance: according to ISLB-17 – Compressibility: according to ISLB-30 – Hardness: according to ISLB-18 PAD TH ≤ 10mm --> FT#U TH MAX= 2,5mm PAD TH ≤ 10mm --> FT#U TH min= 1,5mm 10mm < PAD TH < 24mm --> FT#U TH MAX= 3,5mm 10mm < PAD TH < 24mm --> FT#U TH min= 2mm PAD TH > 24mm --> FT#U TH MAX= 4,5mm PAD TH > 24mm --> FT#U TH min= 3mm			
3	C.8523	Pre-coating water based adhesive	–
– Color: black – Shear resistance: according to ISLB-17 Plate surface ≤ 100cm² --> 2,50mg/cm² ÷ 5,50mg/cm² Plate surface > 100cm² --> 8,50mg/cm² ÷ 11,00mg/cm²			
4	MC.002	Powder paint	–
– Color: black Thickness = 40 ÷ 90 µm ALL THE DIMENSIONS EXPRESSED IN THE DRAWING DON'T CONSIDER THE THICKNESS OF THE PAINT			
5	PM.1066	Backing plate	2
– Plate material: S235JR – Plate surface: 3.579,1 mm² – General tolerances: ±0.3 – Roughness: Ra ≥ 7 µm Rz ≥ 45 µm			
5	PM.1066A	Backing plate	2
– Plate material: S235JR – Plate surface: 3.651,1 mm² – General tolerances: ±0.3 – Roughness: Ra ≥ 7 µm Rz ≥ 45 µm			
6	ML.238K	2x acustic sensor	1
– Spring material: steel 65Mn – Surface treatment: degreasing			
7	ML.340	Acoustic wear sensors	2
– Spring material: steel 65Mn – Surface treatment: degreasing			
8	AV.843	Anti-noise shim	2
– Spring material: multilayer rubber-steel-rubber – Surface treatment: smooth			
9	AV.844	Anti-noise shim	2
– Spring material: multilayer rubber-steel-rubber – Surface treatment: smooth			

REVISIONS & MODIFICATIONS

REV	DATE	R.d.M.	DESCRIPTION	SIGNATURE

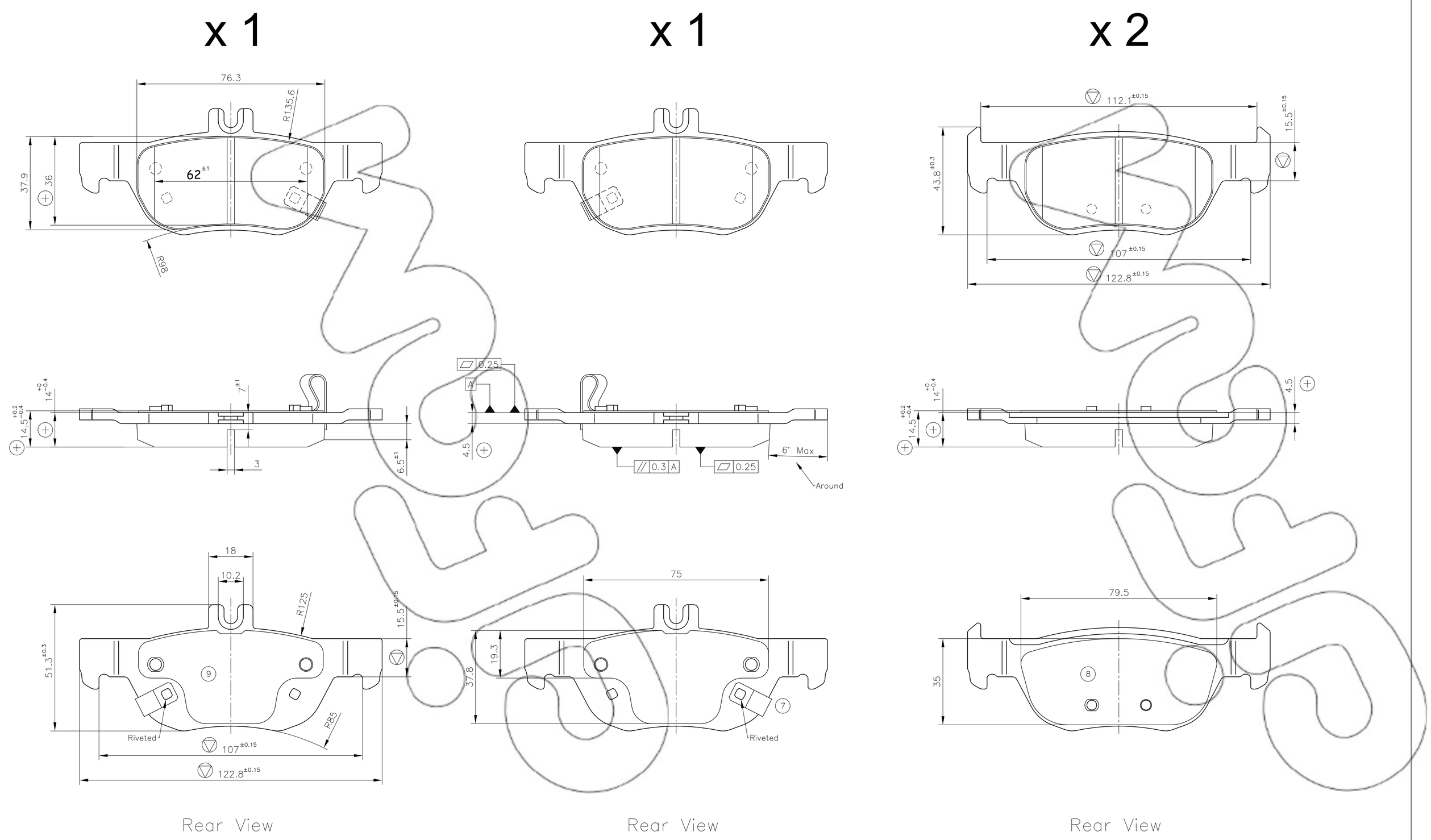

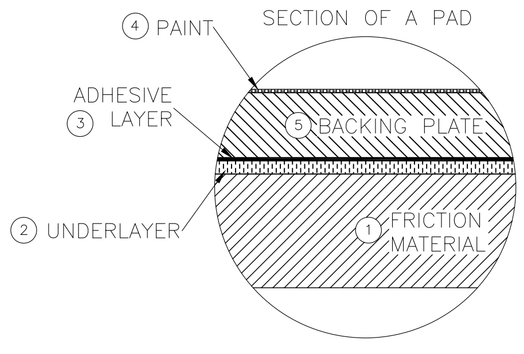

KIT INCLUDED WITH THE PADS SET

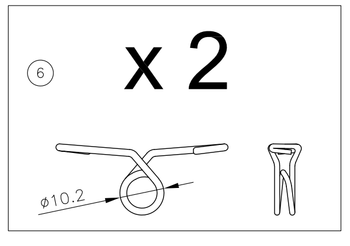

UNLESS OTHERWISE STATED THE FOLLOWING APPLIES:

- General symmetry ÷ 0.3 Z
- Control of prohibited and restricted substances according to PSA-51
- Identification of key characteristics according to PQ-30
- Abbreviations according to Mod.UT-63

CRITICALITY LEGEND

REPORT	12	CRITICAL	7	IMPORTANT	14

CAD DRAWING – MANUAL MODIFICATIONS ARE NOT ALLOWED

Part name	BRAKE PADS	Prod. class (PQ-16)	1D
Reference Code	1226.0		

	Signature	Date	Draw. N° 5535	Scale 1:1
Drawn	Castellino A.	22.01.2021		Size A1
Approved	Balocco E.	22.01.2021		
Verified	Chiecchio M.	22.01.2021		

Description: COMPLEX PROJECT DRAWING

fri.tech.

Mod.UT-58 1226_0.dwg