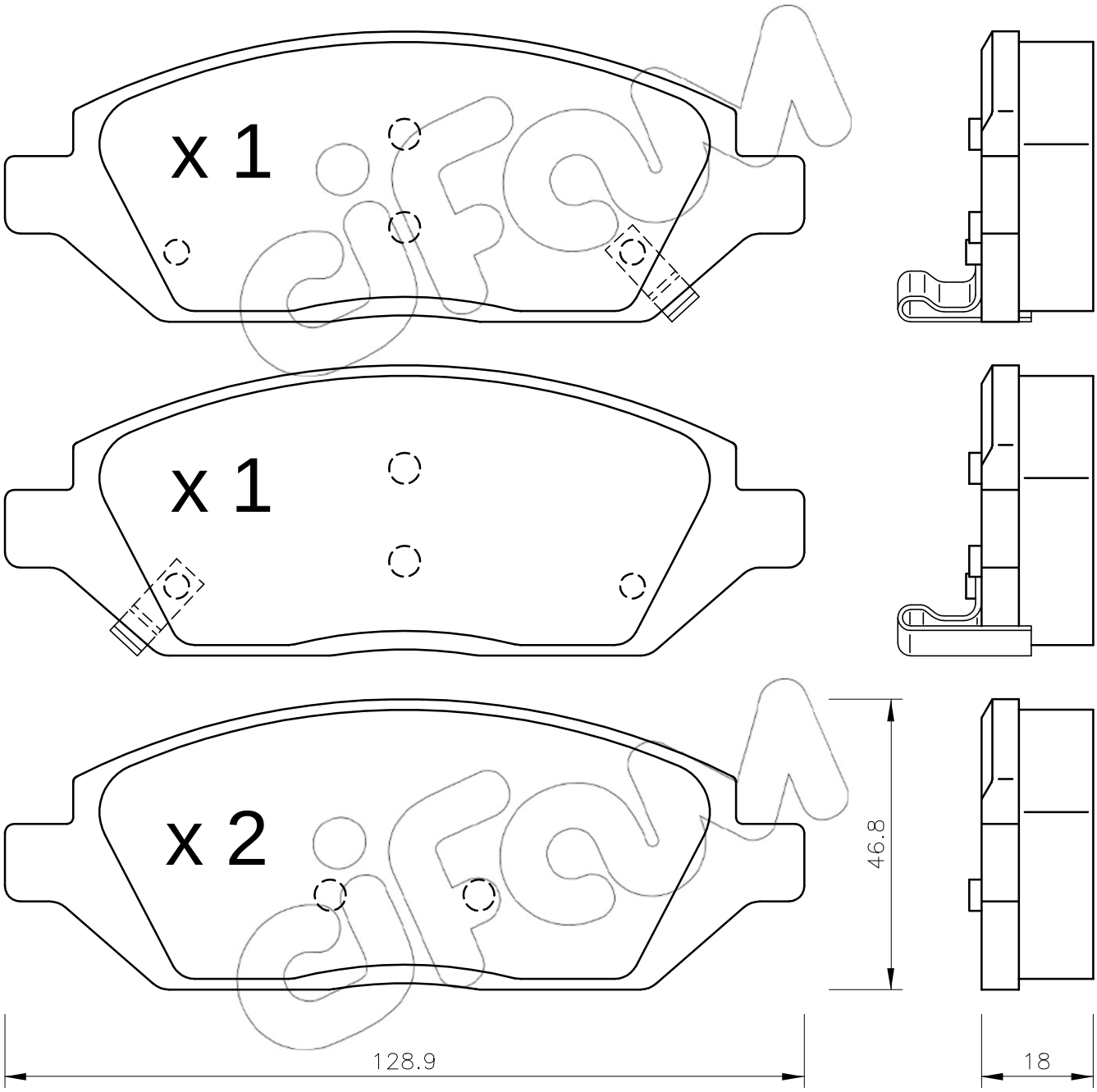
x 1
x 1
x 2
46.8
128.9
18