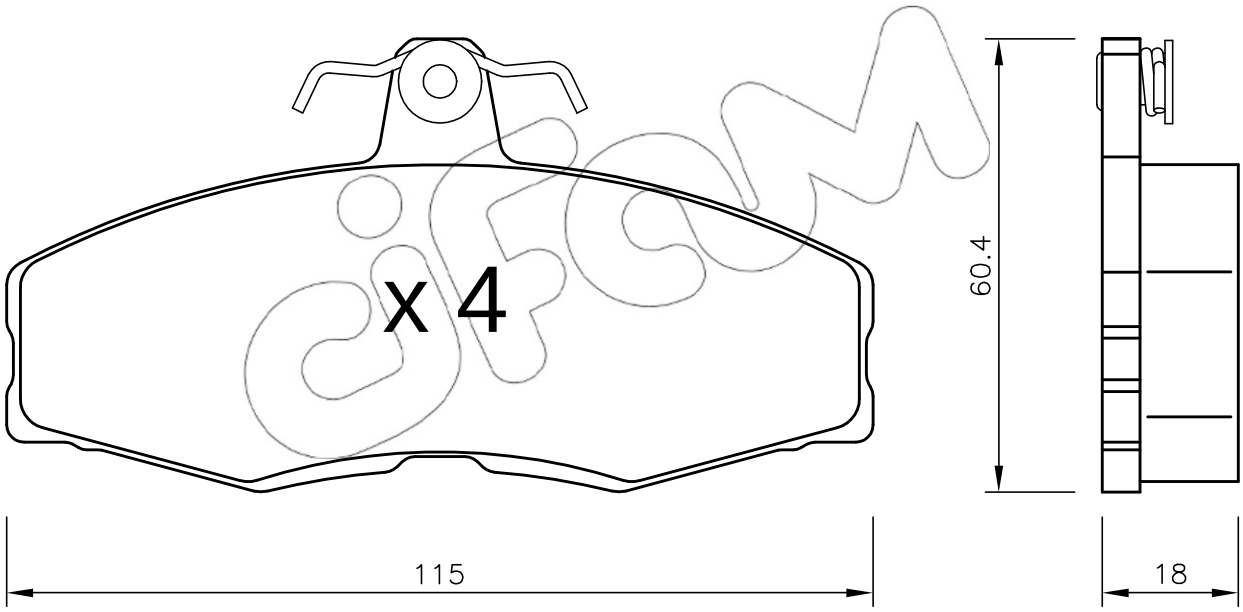
x 4
60.4
115
18