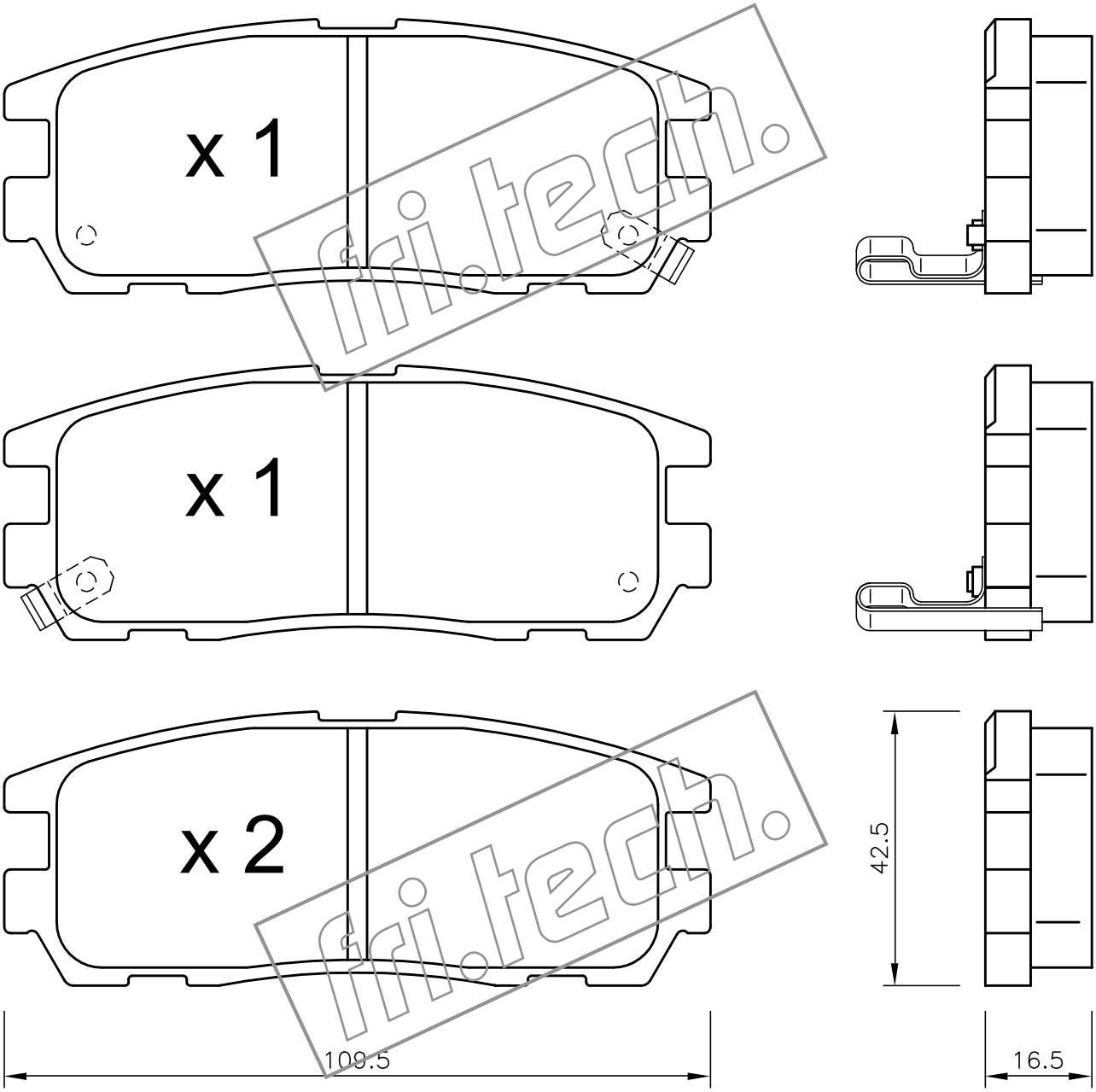

fri.tech.