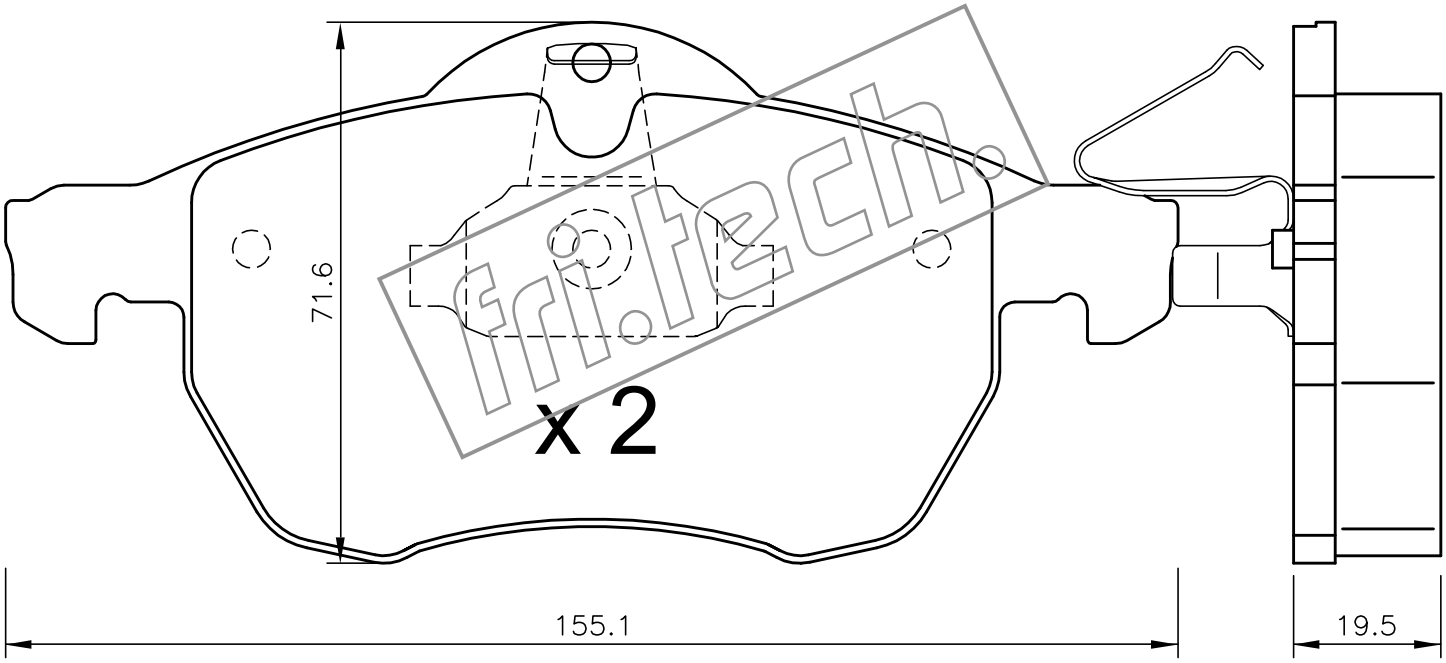
71.6
x 2
155.1
19.5

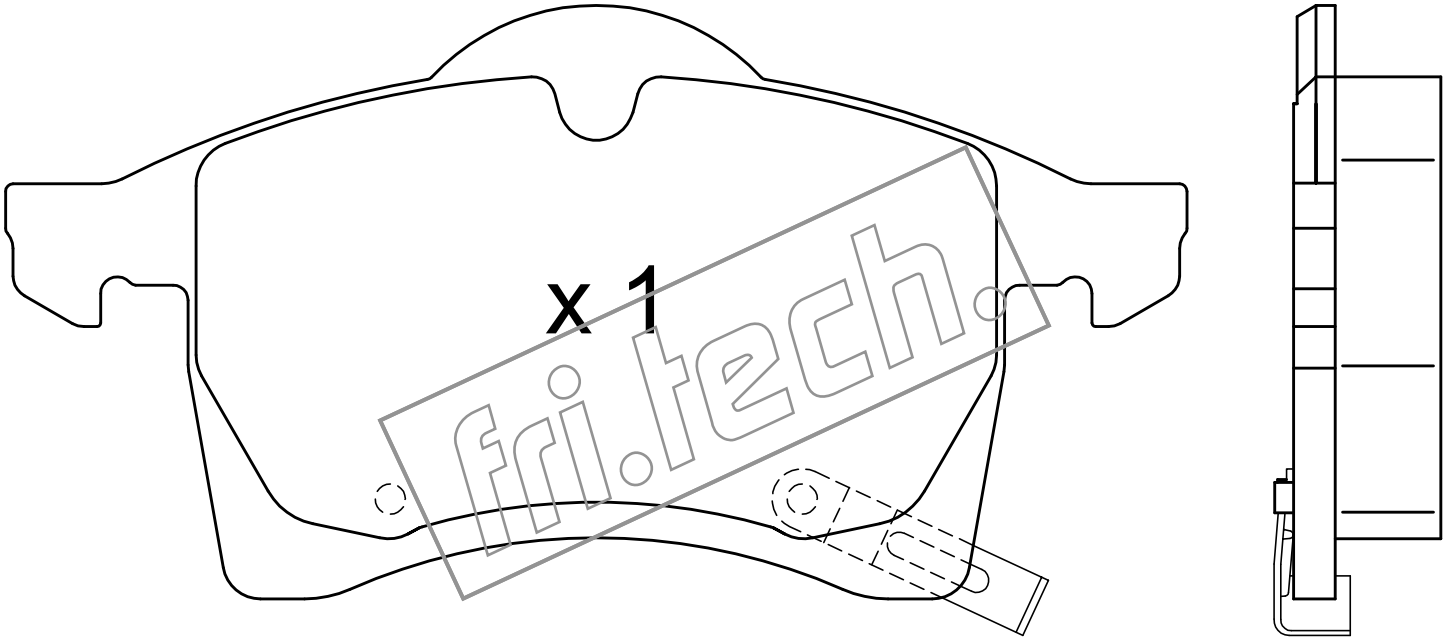
x 1

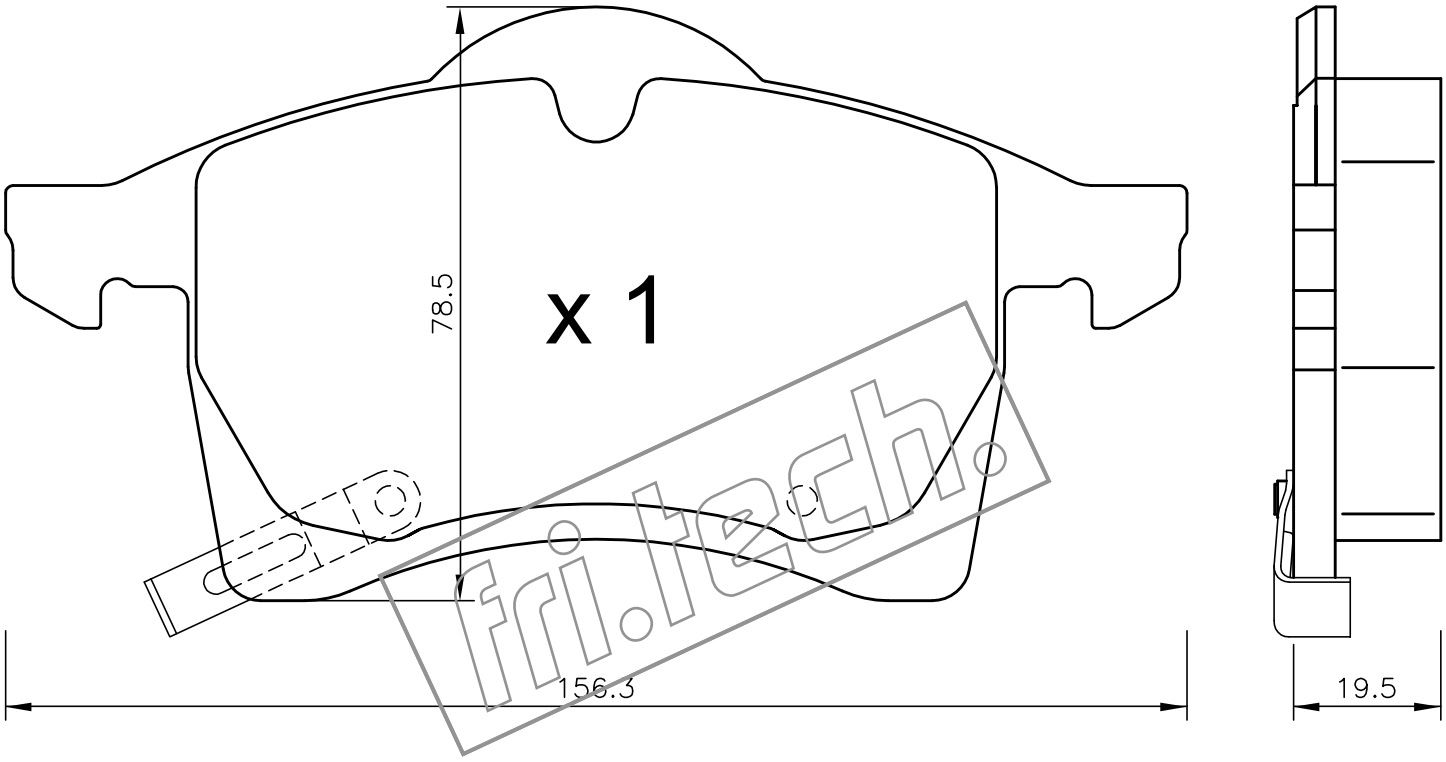
78.5
x 1
156.3
19.5