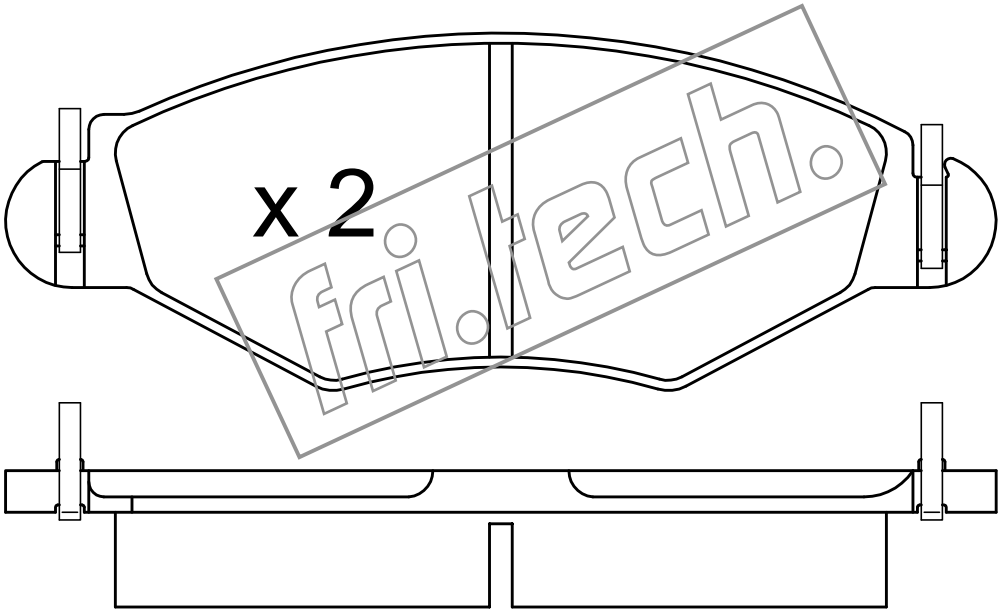

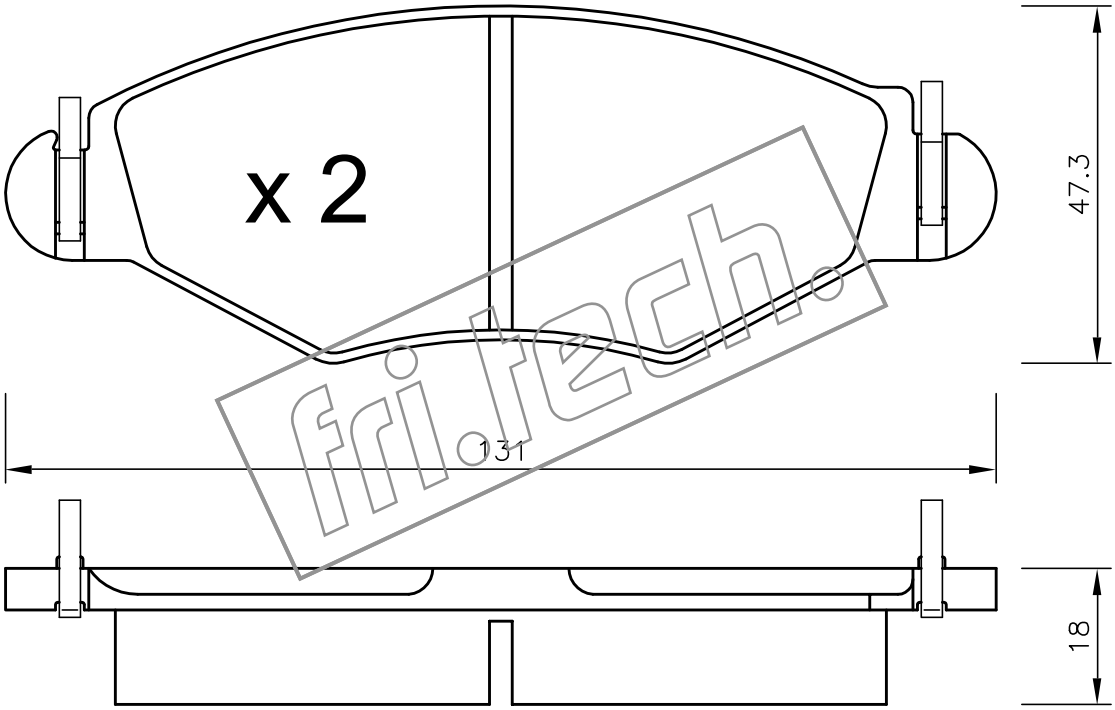

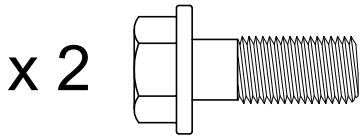

fri.tech.