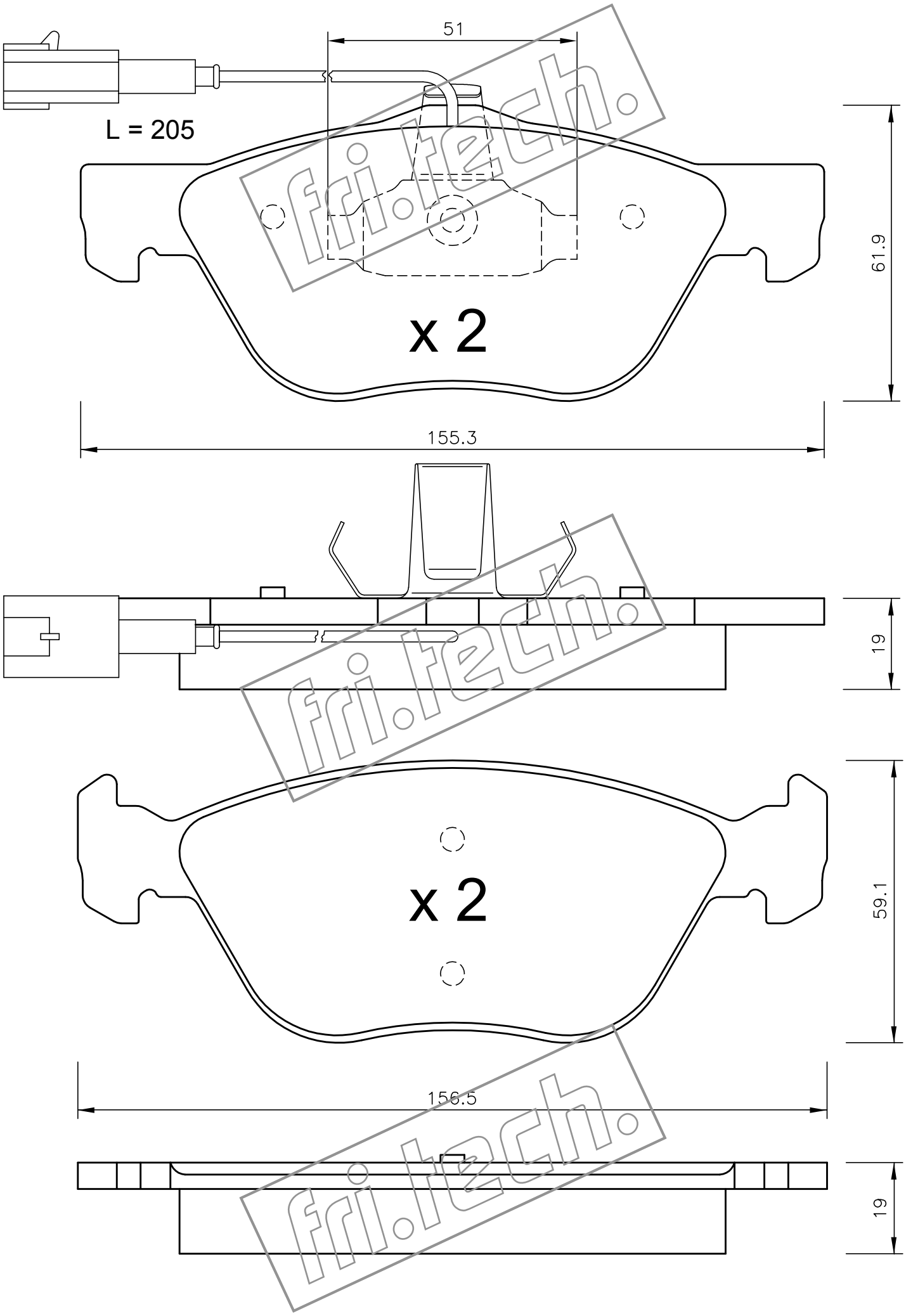
51
L = 205
61.9
x 2
155.3
19
59.1
x 2
156.5
19
fri.tech.
fri.tech.
fri.tech.