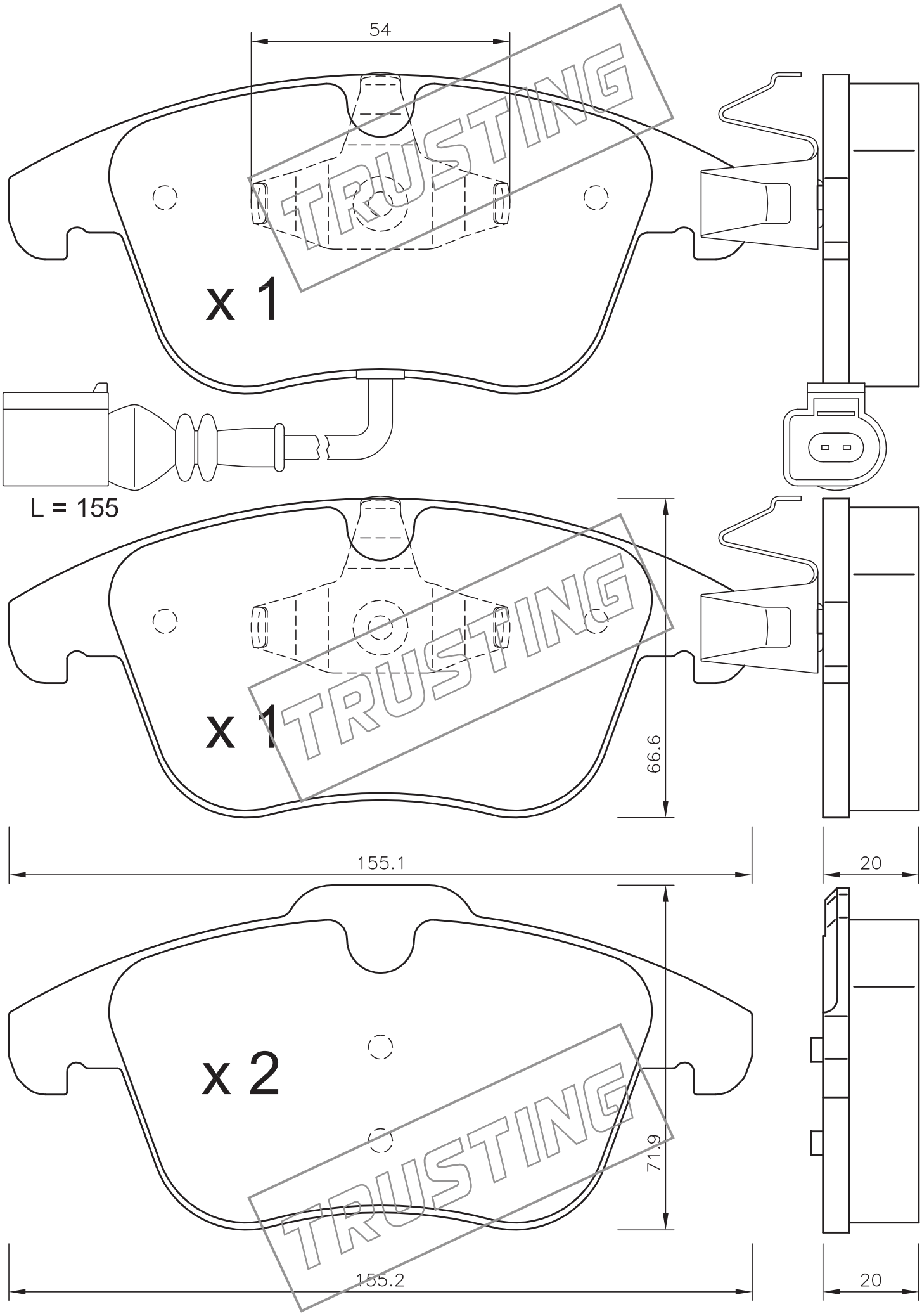
54
x 1
L = 155
x 1
66.6
155.1
20
x 2
71.9
155.2
20
TRUSTING
TRUSTING
TRUSTING