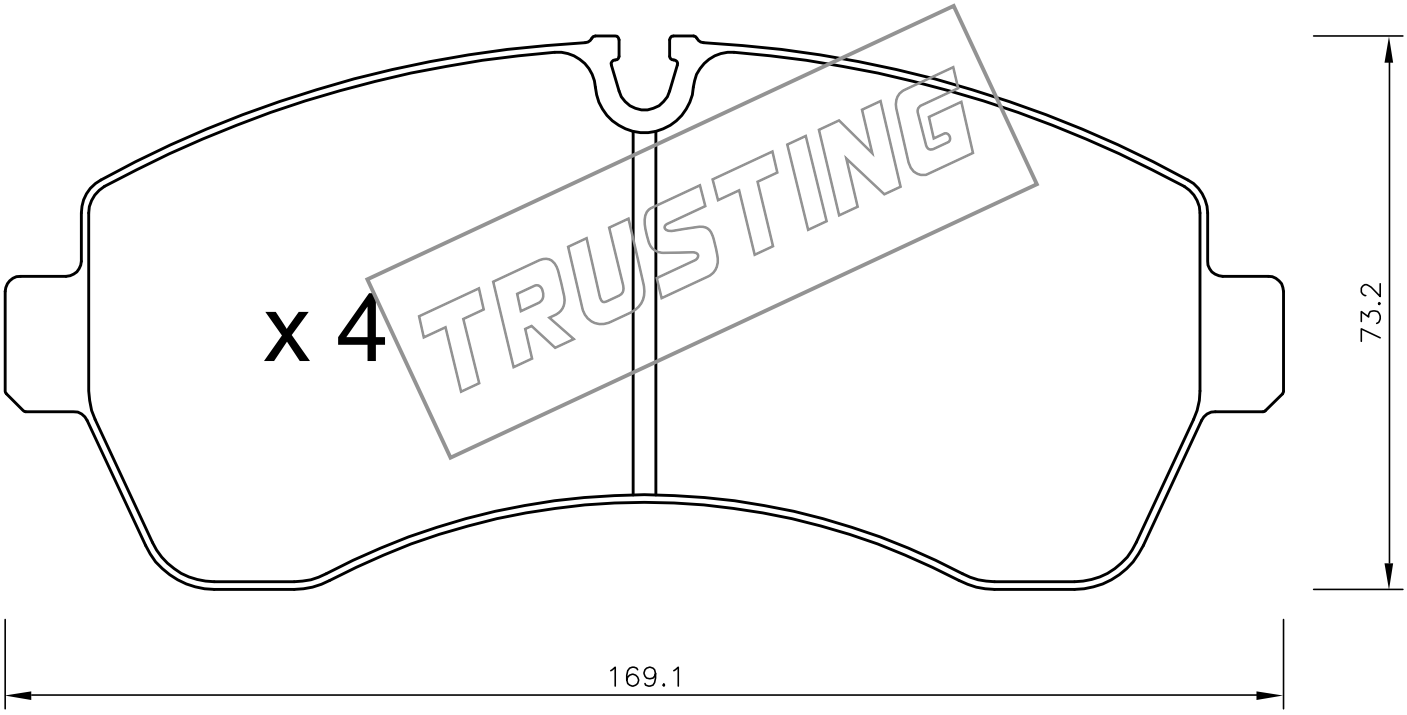

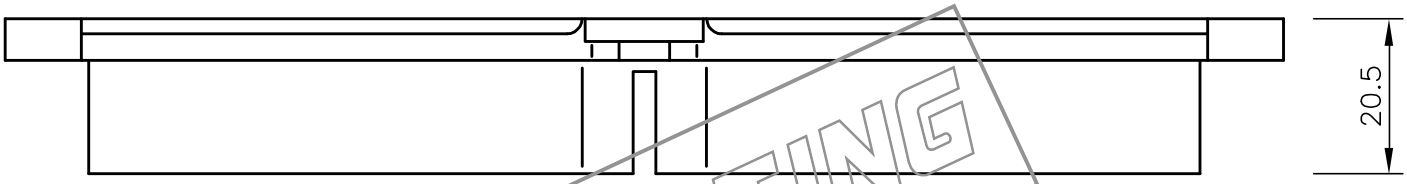

TRUSTING
TRUSTING
TRUSTING