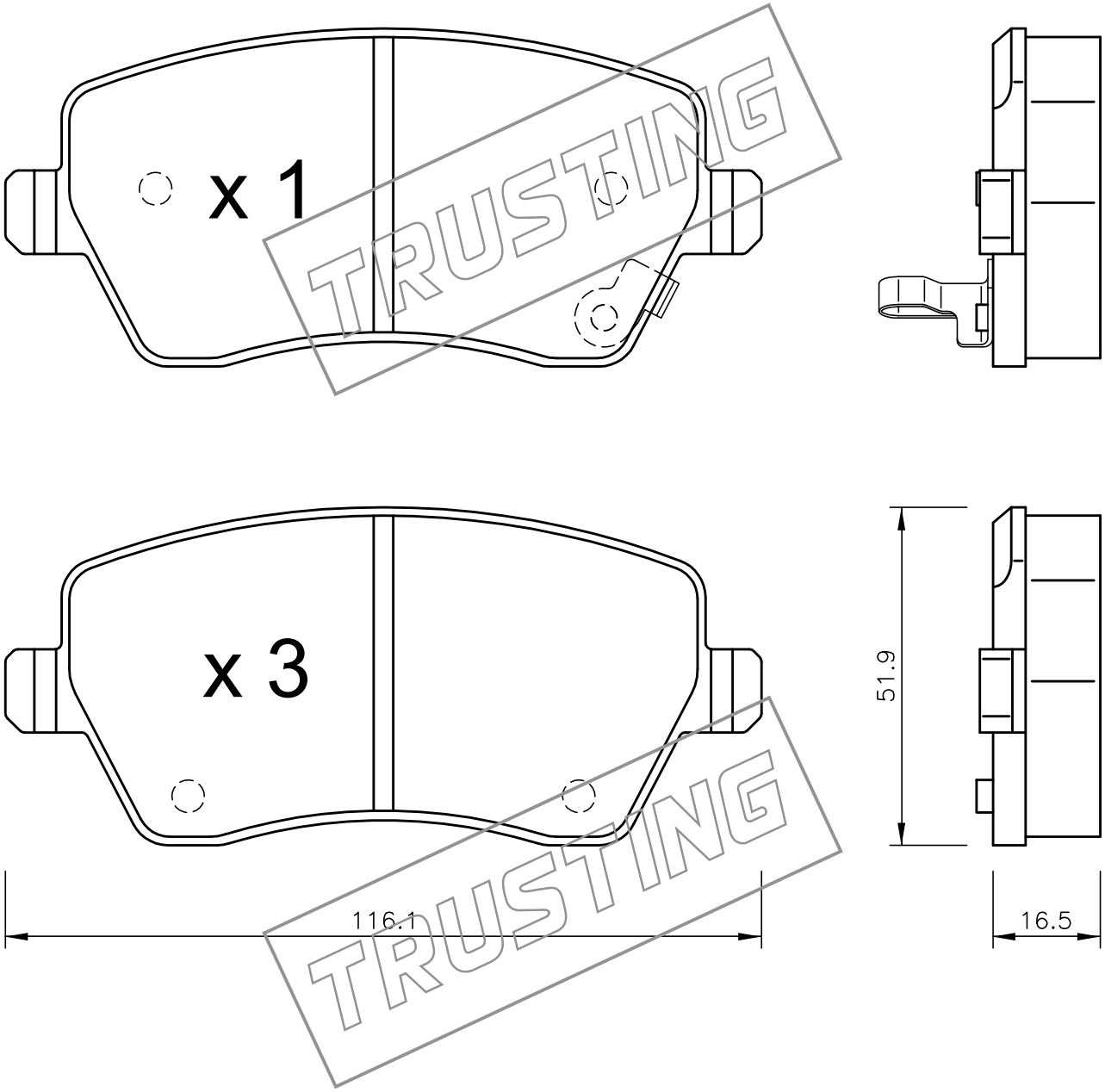

TRUSTING