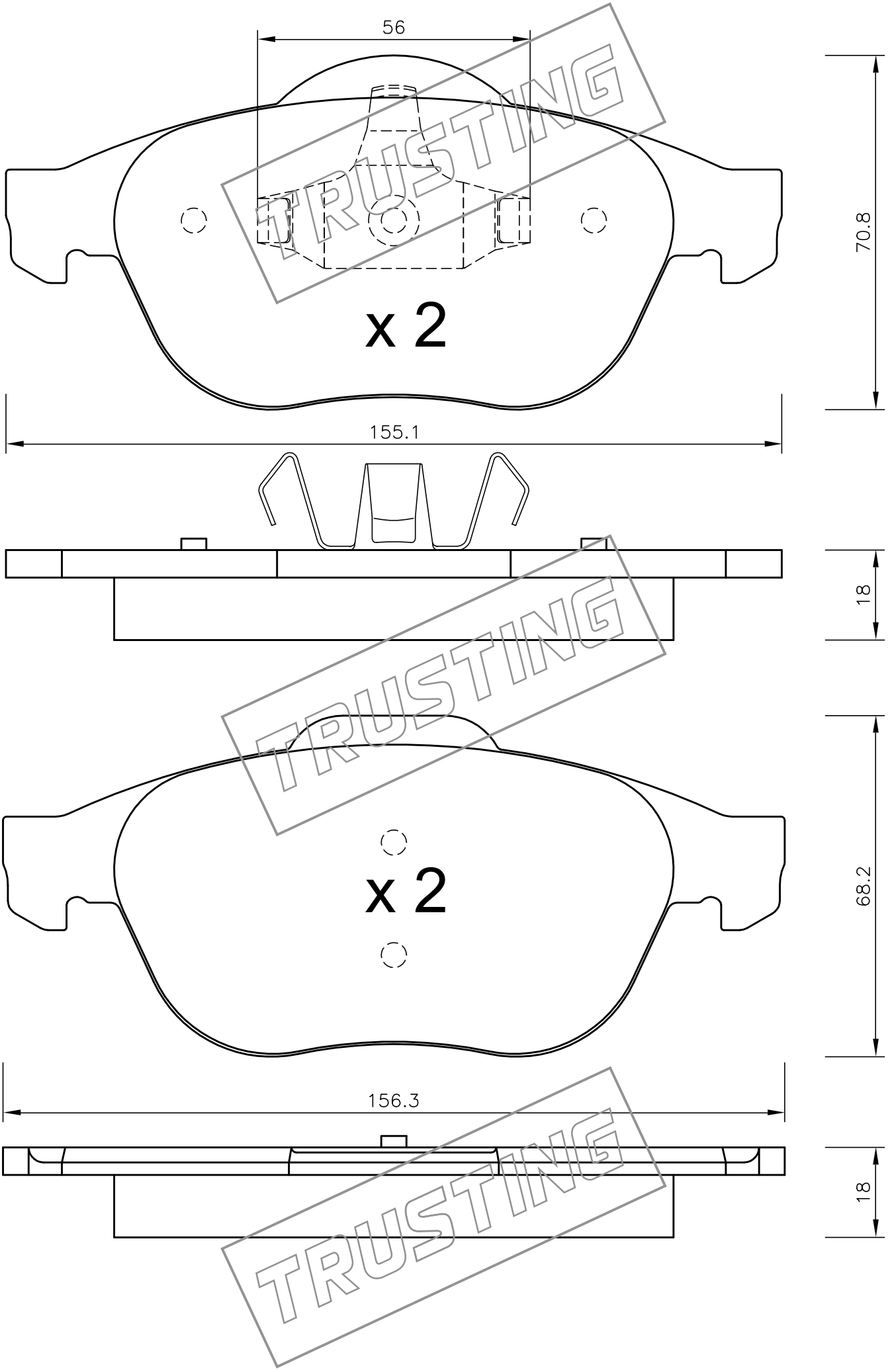
56
70.8
x 2
155.1
18
68.2
x 2
156.3
18
TRUSTING
TRUSTING
TRUSTING