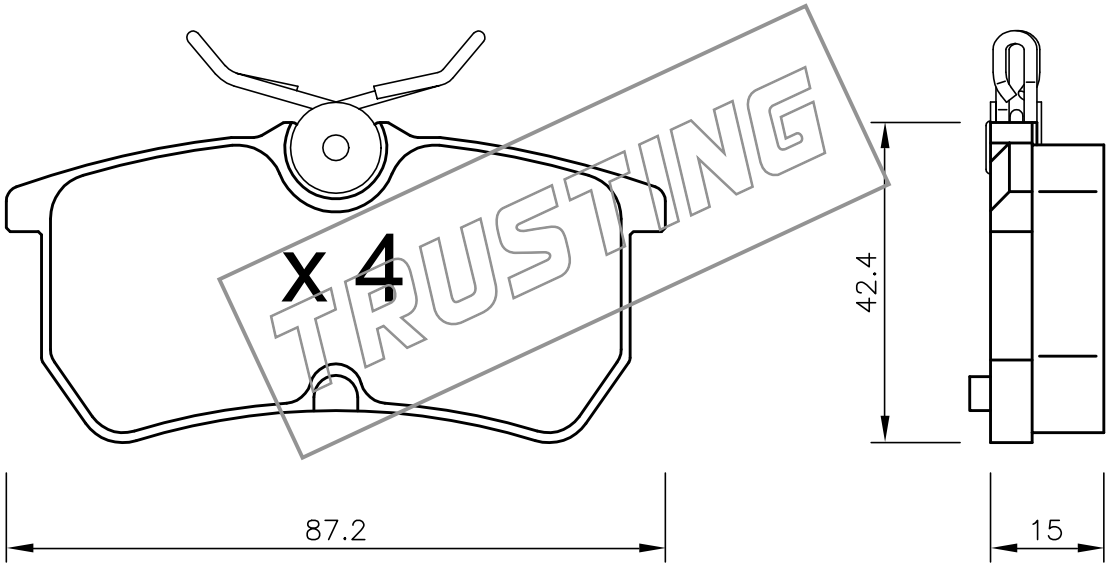

TRUSTING

TRUSTING