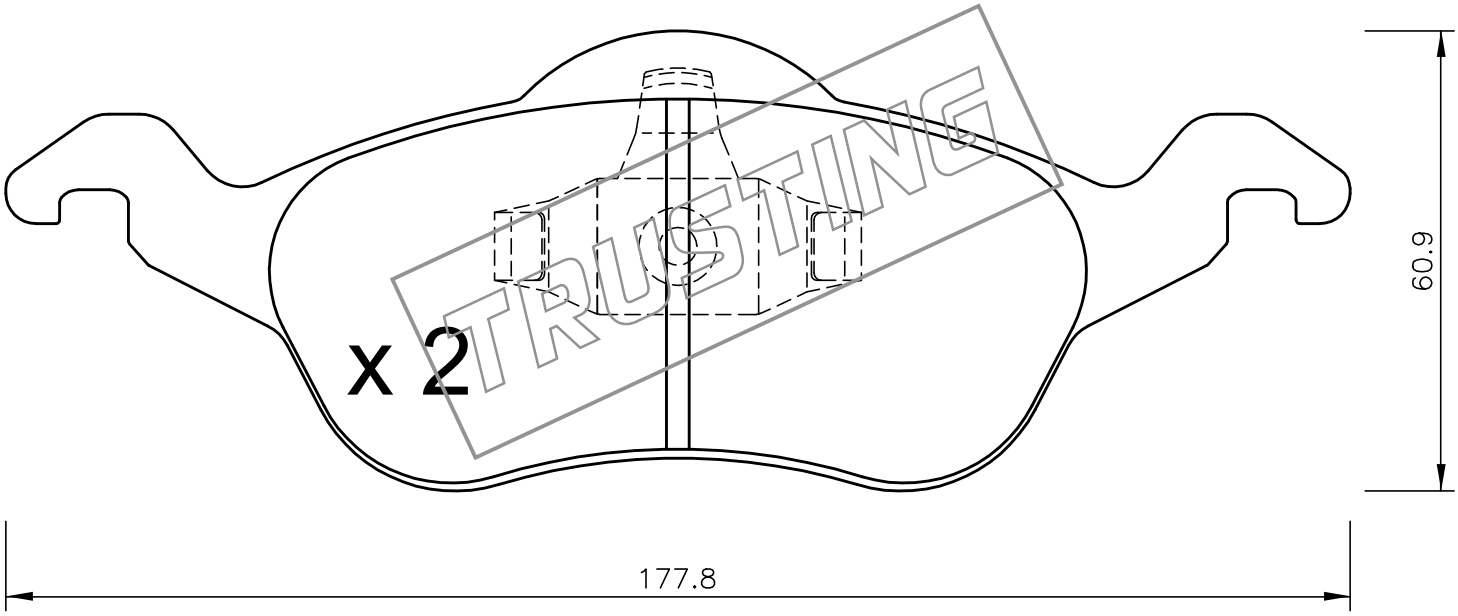

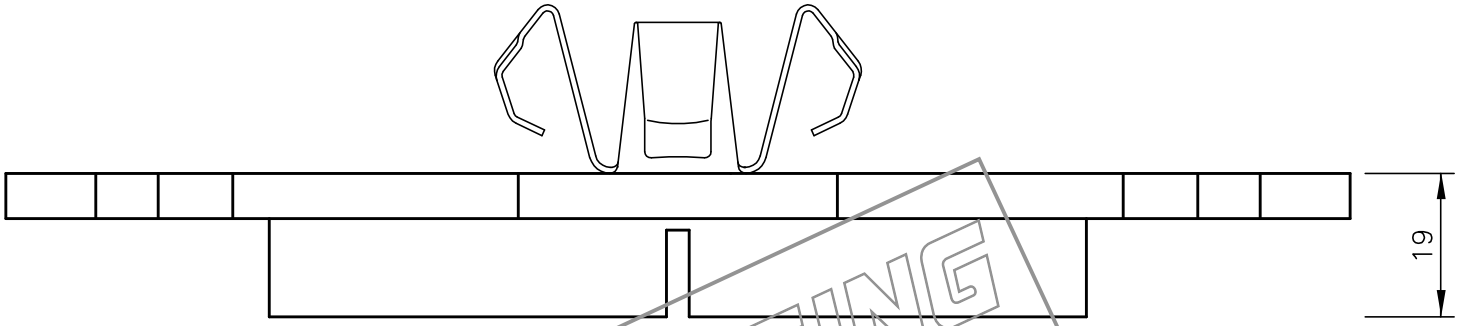

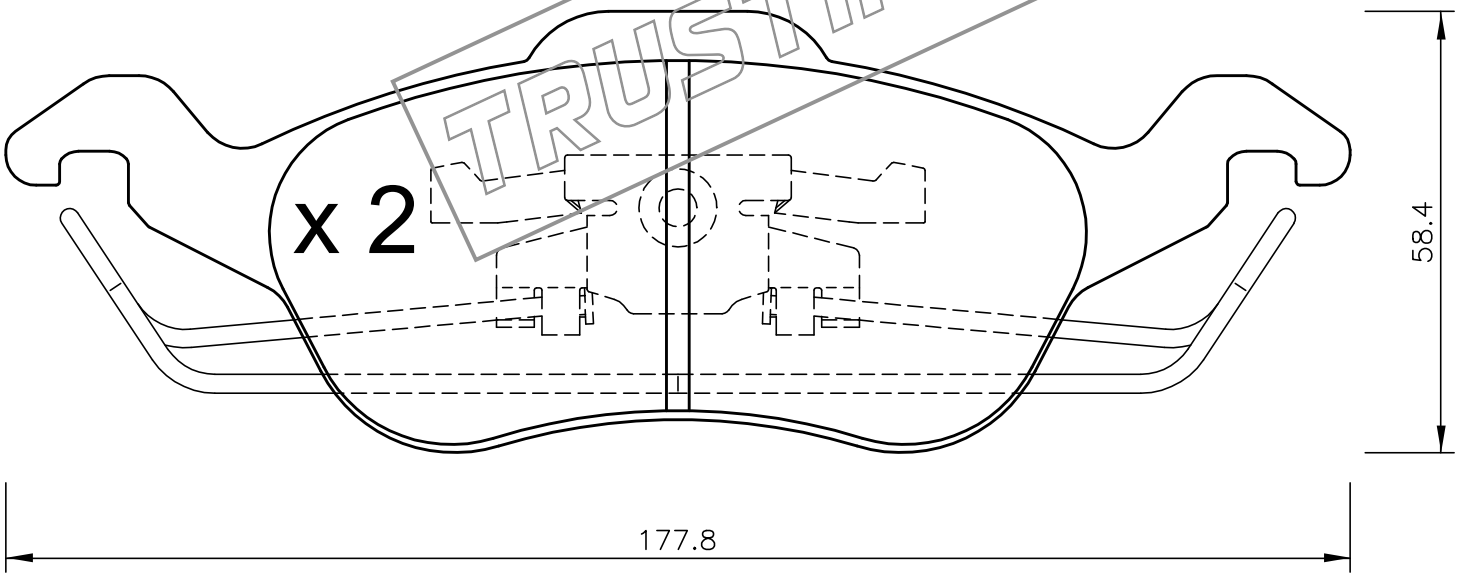

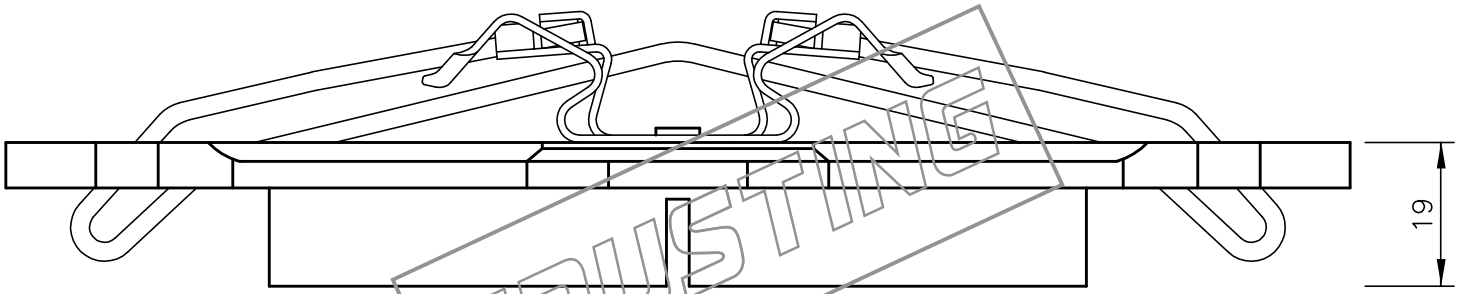

TRUSTING