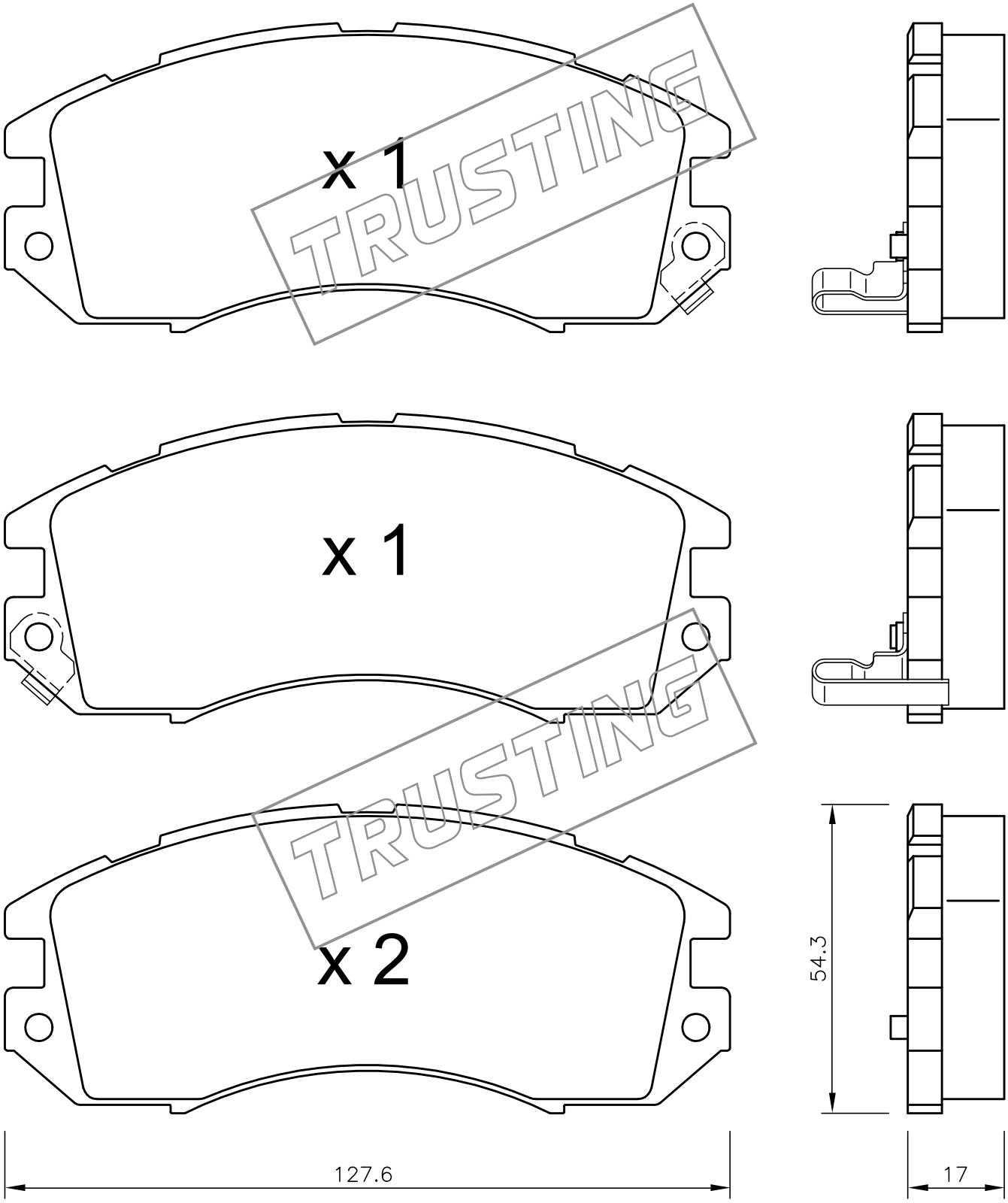

TRUSTING
TRUSTING
TRUSTING