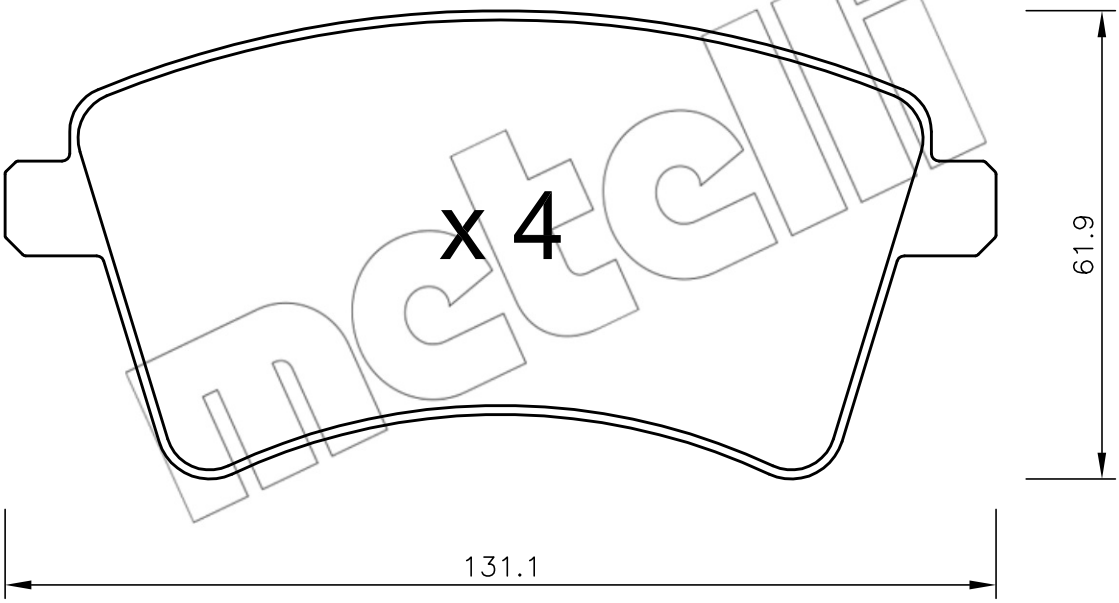
x 4
61.9
131.1

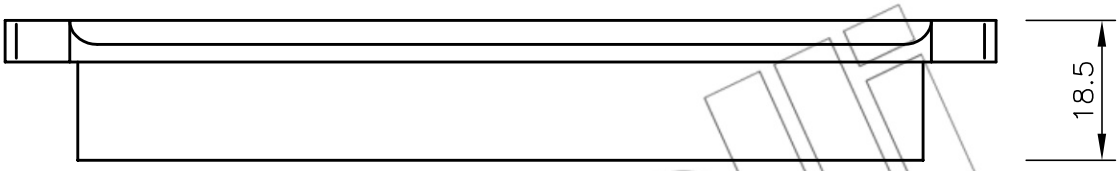
18.5