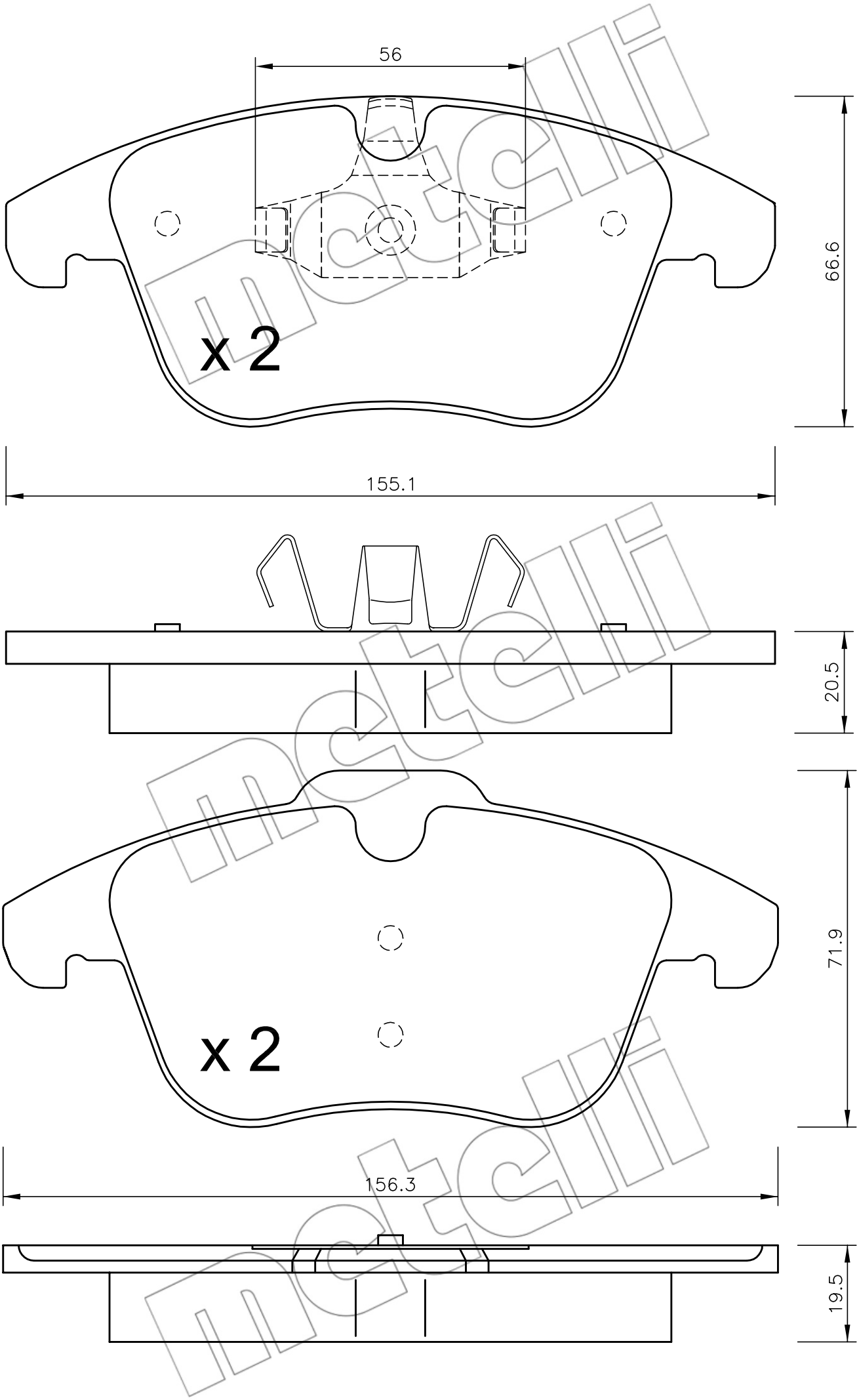
56
66.6
x 2
155.1
20.5
71.9
x 2
156.3
19.5