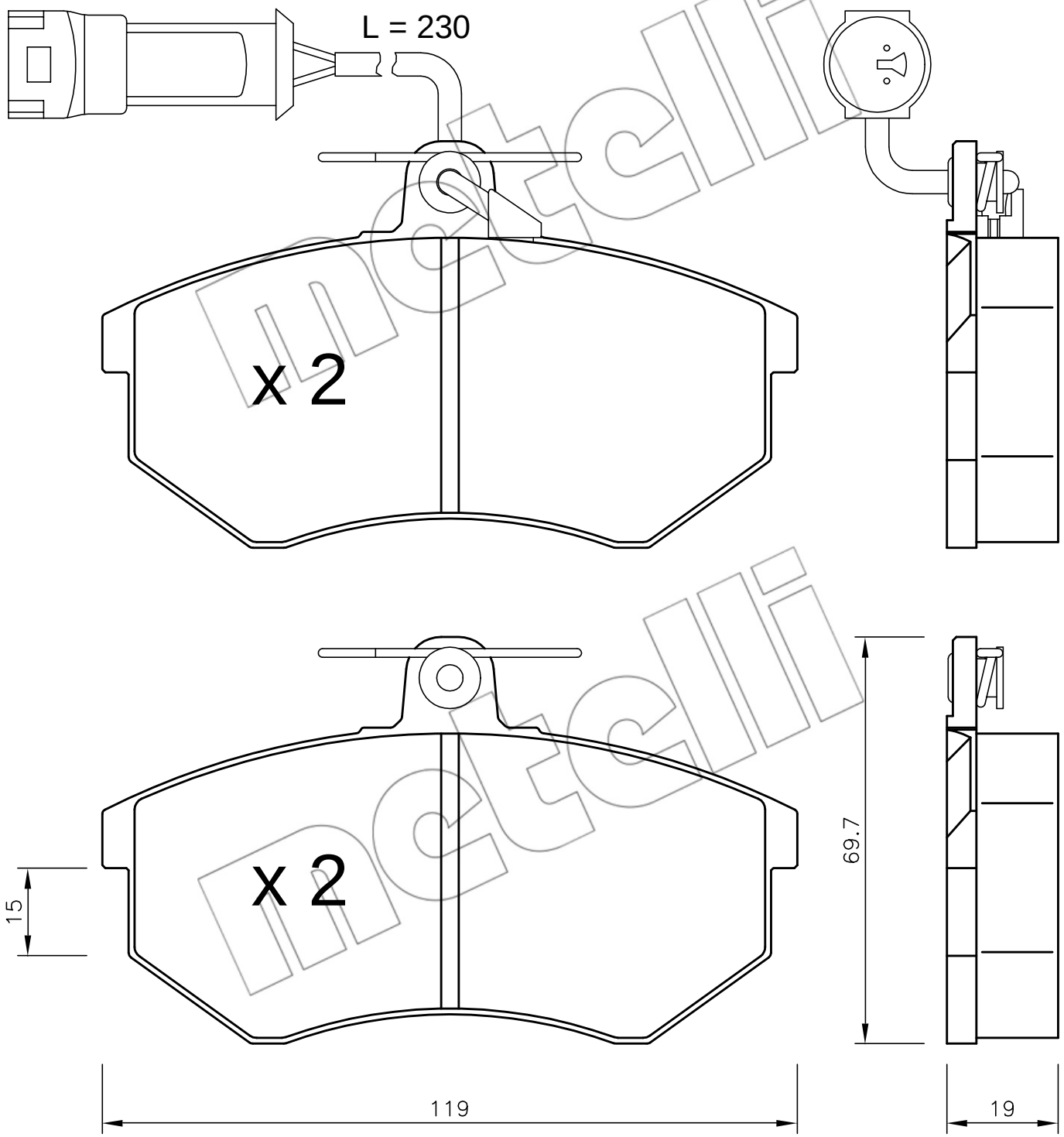
L = 230
x 2
x 2
15
69.7
119
19