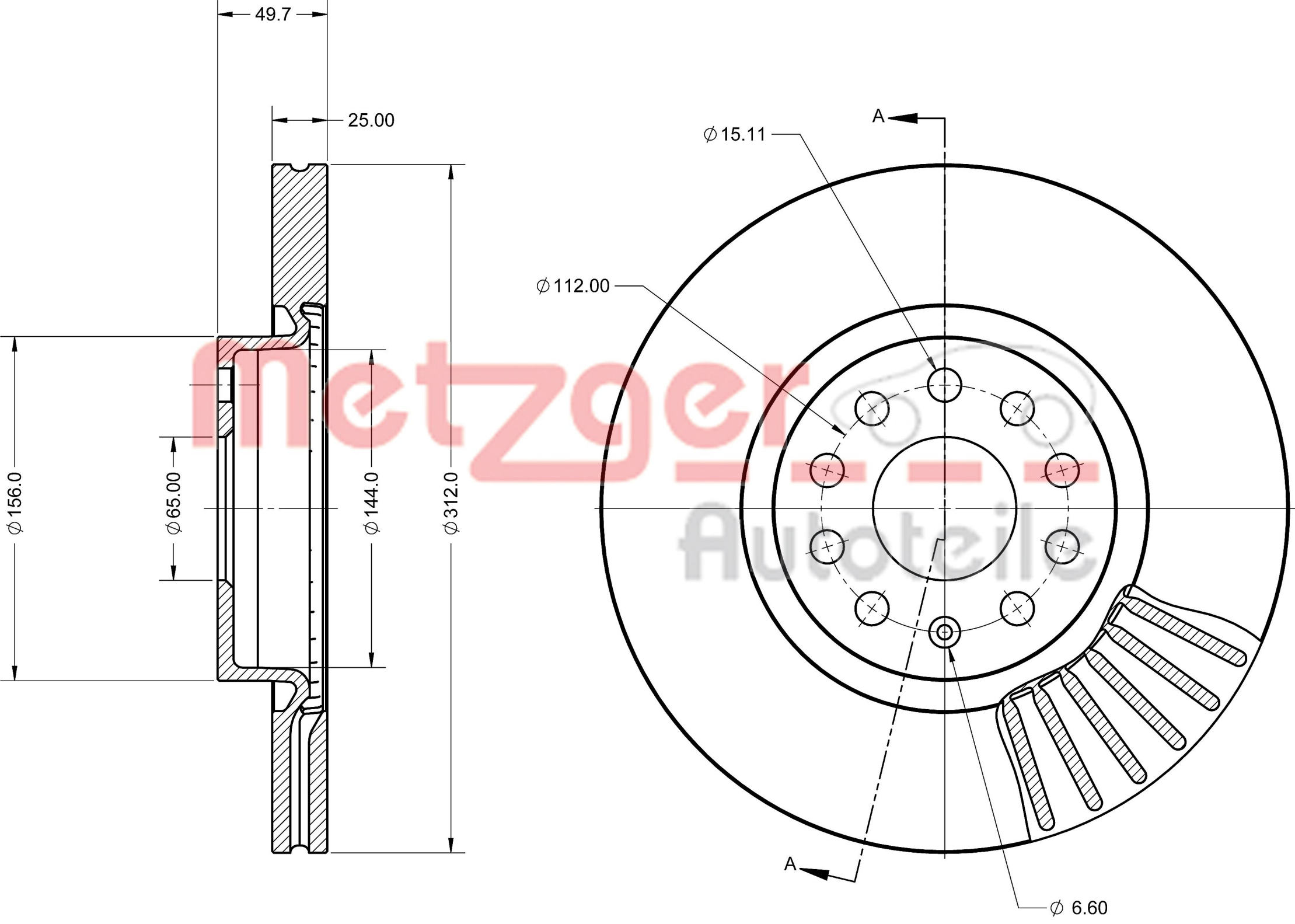
49.7
25.00
∅156.0
∅65.00
∅144.0
∅312.0
A
∅15.11
∅112.00
A
∅ 6.60