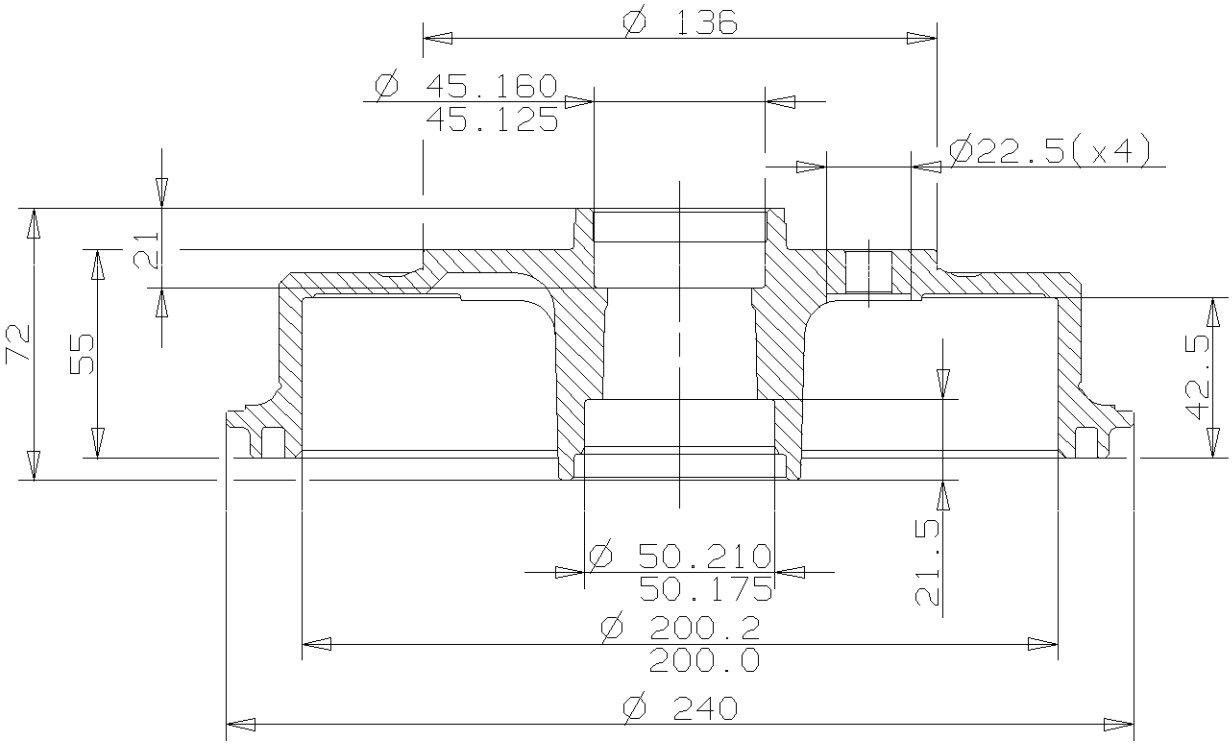

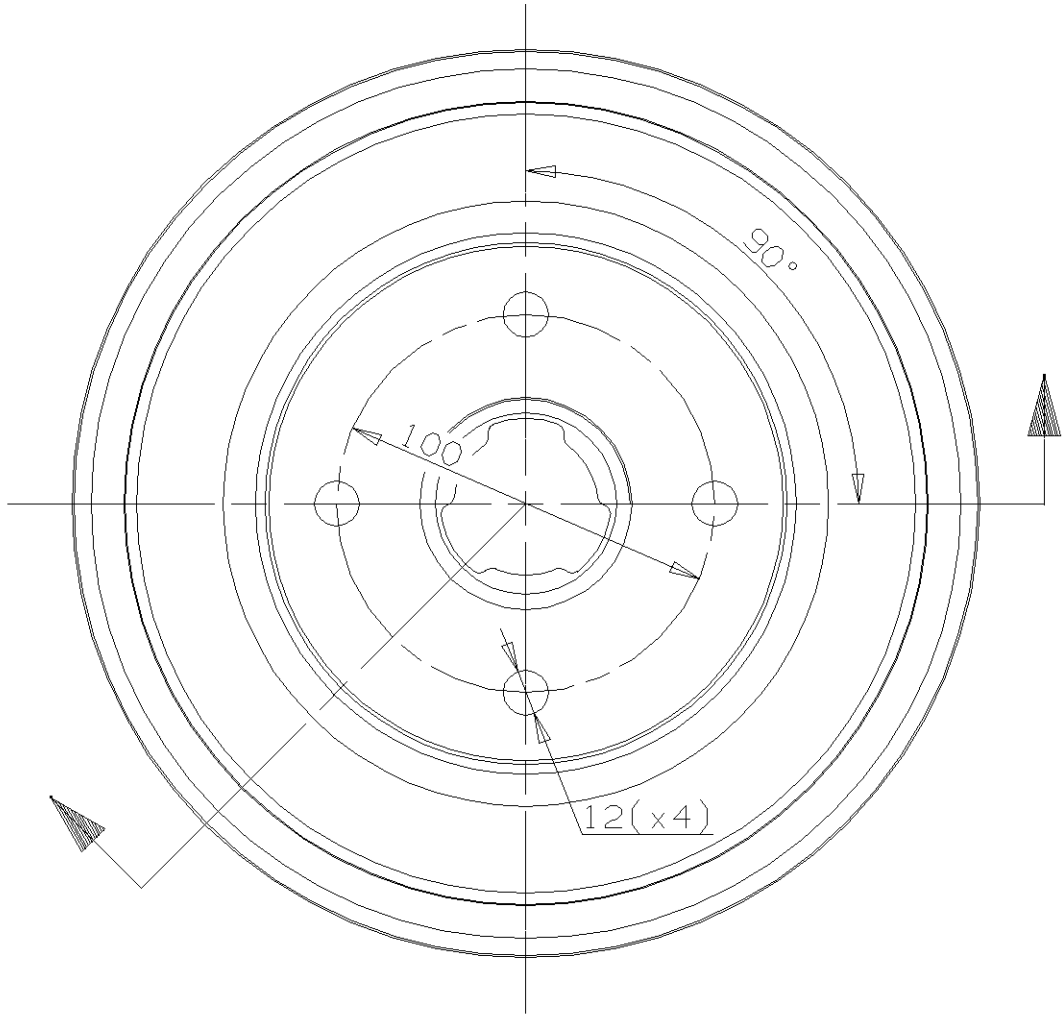

Max.DIA. 201 mm

Weight 4.2 Kg